PROJECT MANUAL

Mobile Civic Center Cooling Tower Replacement – Installation Labor

Project # CC-031-23 REBID

City of Mobile, Alabama

Architectural and Engineering Department

205 Government Street
5th Floor – South Tower
Mobile, Alabama 36602
Phone: 251-208-1083

June 2, 2023
Issued for Construction

INDEX TO DOCUMENTS

SECTION	DOCUMENT NAME
BIDDING AND CONTRACT REQUIREMENTS:	
Section 00100	Invitation to Bid
Section 00200	Instructions to Bidders
Section 00300	Supplementary Instructions to Bidders
Section 00400	Bid Form
	Sales Tax Form C-3A
Section 00500	Contractor Short Form Contract
Section 00600	Bonds, Certificates and Affidavits
	Performance Bond (Owner's modified form)
	Labor and Material Payment Bond (Owner's modified form)
	E-verify Documentation (Sample)
	Supplemental Attachment for ACORD Certificate of Insurance
	W-9 Request for Taxpayer Identification Number and Certification and City of Mobile Vendor Information Form
SPECIFICATIONS:	
DIVISION 1:	**General Requirements**
Section 01010	Summary of the Work
Section 01210	Allowances

ATTACHMENTS:

Mechanical and Electrical Drawings:

- M-1 Schedule, Detail, General Notes, Legend and Vicinity Map
- M-2 Demolition Plan and Keynotes

Evapco AT 29-4K21 Cooling Tower Technical Data Sheet

SECTION 00100

INVITATION TO BID

You are invited to submit a sealed bid for construction of the following facility:

PROJECT NAME:	Mobile Civic Center -Cooling Tower Replacement Installation Labor
PROJECT LOCATION:	401 Civic Center Drive, Mobile, Alabama 36602
PROJECT NUMBER:	CC-031-23 REBID

1. BID DATE:
   A. Sealed Bids will be received and clocked in until **2:15 PM** local time, **Wednesday, the 21st day of June 2023** in the office of the City Clerk, Government Plaza, 9th Floor South Administrative Tower, 205 Government Street, Mobile, Alabama 36602.
   B. All Bids not clocked in at the City Clerk's Office prior to the time specified, or Bids received after the specified time, will be automatically rejected and returned immediately, unopened.
   C. Bids will be publicly opened and read at **2:30 PM** local time, in the Atrium Lobby of Government Plaza.
2. SPECIFICATIONS AND DRAWINGS:
   A. Specifications and Drawings are on file and may be examined at the following location:
      a. City of Mobile, 5th Floor Architectural Engineering Department, Government Plaza, 205 Government Street, Mobile Alabama 36602.
   B. Bidders shall use complete sets of Bid Documents in preparing their bid. Neither the Owner nor Architect/Engineer assumes responsibility for errors or misinterpretations resulting from the use of incomplete sets of Bid Documents.
   C. Bidders are requested to pick-up Bid Documents from Architectural Engineering Department between the hours of 8:00 AM to 12:00 PM and 1:00 PM to 3:00 PM or online at the following address: https://www.cityofmobile.org/bids/
   D. Bidders receiving a minimum of one complete set of Bid Documents shall register with the Project Manager.
   E. Addenda will be issued via e-mail to each bidder registered as having a complete set of Bid Documents and all Pre-Bid Conference attendees.
3. BID SURETY: Required on Bids $10,000.00 or more
   A. A Cashier's Check drawn on a bank registered to do business in the State of Alabama and which is a member of the Federal Deposit Insurance Corporation, or a Bid Bond payable to Owner, City of Mobile, in the amount of 5% of the Base Bid, but in no event more than $10,000.00 is required to accompany Bid.

B. Bid Bond must be issued by a Surety licensed to do business in the State of Alabama. Bidder shall require the attorney in fact who executes the required bonds on behalf of the surety to affix to the bond a certified and current copy of the power of attorney.

C. No Bid may be modified, withdrawn, or canceled for a period of sixty (60) days after the time designated above for receipt of bids.

D. The City of Mobile will have sixty (60) days from the bid opening date to award contract.

4. SURETY QUALIFICATIONS:

A. A Surety authorized to do business in the State of Alabama must issue Bonds.

B. If the Base Bid is $50,000 or more, the Surety must have a minimum rating of A/Class VI as reported by the latest issue of Best Key Rating Guide Property-Casualty published by Alfred M. Best Company, Inc.

5. IRREGULARITIES AND REJECTION:

A. The City of Mobile reserves the right to waive irregularities in the Bid and in Bidding, and to reject any or all Bids.

6. BIDDER QUALIFICATIONS:

A. Bids for Work costing $50,000 or more must be licensed pursuant to current Alabama law and of classifications compliant with the State of Alabama Licensing Board for General Contractors. Note that if the contract amount is $10,000 or greater, both a Performance Bond and a Labor and Material Payment Bond shall be required. **Before Bidding, Contractor shall verify their license classification of their General Contractors license with the State of Alabama Licensing Board for General Contractors to verify classification is acceptable to perform 51% of the Scope of Work.**

B. In case of a joint venture of two or more Contractors, the amount for the bid shall be within the maximum bid limitations as set by the State of Alabama Licensing Board for General Contractors of at least one of the partners to the joint venture.

7. NON-RESIDENT CONTRACTORS:

A. Except for contracts funded in whole or part with funds received from a federal agency, preference shall be given to resident Contractors on the same basis as the nonresident Contractor's state awards contracts to Alabama Contractors bidding in similar circumstances.

B. Nonresident Bidders shall, prior to submitting a bid, be registered with the Alabama Secretary of State and the Alabama Department of Revenue. Provide the Secretary of State Business "Entity ID Number" on the Bid Form in the space provided.

A. Minutes of this conference will be made as an Addendum for the project.

8. BID SUBMITTAL:

A. Bids must be submitted on copies of the Bid Forms furnished in the bidding documents.

B. Bid, with Bid Security, Sales Tax Form C-3A and other supporting data specified, shall be contained in a sealed, opaque envelope, approximately 9x12 inches or larger and be marked on the outside with the words **"SEALED BID FOR MOBILE CIVC CENTER COOLING TOWER REPLACEMENT – INSTALLATION LABOR - PROJECT NUMBER: CC-031-23 REBID".**

C. The Bid envelope shall be clearly addressed to the Owner as indicated on the Bid Form and include the bid date, the name, address and State License number and classification of the Bidder issued by the State of Alabama Licensing Board for General Contractors.

D. All Bids of $50,000 or more must include the bidder's State of Alabama General Contractor's License information written on the outside of the bid envelope. Any bid submitted without such license information may be rejected and returned to the bidder unopened.

E. In addition, in large letters on both front and back of envelope, write the following: **DO NOT OPEN UNTIL TWO-THIRTY PM, JUNE 21, 2023**.

F. For a bid to be valid it shall be delivered at designated location prior to time and date for receipt of Bids indicated in INVITATION TO BID, or prior to any extension thereof issued to Bidders. After that time no Bid will be received or withdrawn.

G. When sent by mail, preferably special delivery, express service, or registered mail, the sealed Bid, marked as indicated above, shall be enclosed in another envelope for mailing such that the exterior mailing container or envelope may be opened without revealing the contents of the Bid. It is the Contractors responsibility to assure delivery of the bid to the City Clerk's Office prior the time and date established.

9. EQUAL OPPORTUNITY:

A. The City of Mobile, Alabama is an Equal Opportunity Employer and requires that all Contractors comply with the Equal Employment Opportunity laws and the provisions of the Bid Documents in this regard.

B. The City of Mobile also encourages and supports the utilization of Minority Business Enterprises on these and all other publicly solicited Bids, and shall be in compliance with the City of Mobile's Minority Utilization Plan as adopted by the City Council.

C. Contractor shall provide an appropriately completed copy of the "City of Mobile Subcontracting and Major Supplier Plan" in the envelope with their Bid Form. Form shall document DBE Subcontractors participating in the project and, should the total % of DBE participation not meet the 15% minimum, all efforts to obtain DBE Subcontractors shall be documented on or attached to the DBE Form when submitted. During construction, contractors are required to submit a "DBE Utilization Report" with every Pay Application.

D. Contractors should contact the City of Mobile, Supplier Diversity Manager for assistance with DBE Subcontractor information and any questions regarding the DBE Compliance Forms. Contact Archnique Kidd at 251-208-7967.

10. ADDITIONAL BIDDING PROCEDURES:

A. Refer to the complete information in the Bid Documents prior to submitting a bid. Additional Bidding Procedure information is contained therein, particularly in the specification Section 00200 "Instructions to Bidders and in Section 00300"Supplementary Instructions to Bidders".

12. STATE OF ALABAMA IMMIGRATION ACT

"The State of Alabama, under the Beason-Hammon Alabama Taxpayer and Citizen Protection Act, Act No. 2011-535, Alabama Code Section 31-13-1, et. Seq., requires:

A. That the Contractor shall be enrolled in the E-Verify Program, shall participate in that Program during the performance of the contract, and shall verify the immigration status of every employee who is required to be verified, according to the applicable federal rules and regulations; and

B. That it will attach to the contract the company's documentation of enrollment in E-Verify.

C. The subcontractor must also enroll in the E-Verify Program prior to performing any work on the contract and shall attach to its sworn affidavit documentation establishing that the subcontractor is enrolled in the E-Verify Program.

13. PUBLIC CONTRACTS WITH ENTITIES ENGAGING IN CERTAIN BOYCOTT ACTIVITIES

A. By signing this contract, Contractor further represents and agrees that it is not currently engaged in, nor will it engage in, any boycott of a person or entity based in or doing business with a jurisdiction with which the State of Alabama can enjoy open trade.

END OF SECTION

SECTION 00200

INSTRUCTIONS TO BIDDERS

THE ATTENTION OF ALL BIDDERS IS CALLED TO THE FOLLOWING INSTRUCTIONS AND CONDITIONS:

I. BIDDING DOCUMENTS:

A. Bidders may obtain complete sets of Bid Documents and Specifications (Project Manual) from the Department of Architectural Engineering as listed in the Invitation to Bid.

B. Bidders shall use the complete set of documents in preparing their bid. The City of Mobile assumes no responsibility for errors or misinterpretations resulting from use of an incomplete set of documents.

2. INTERPRETATION OF BID DOCUMENTS:

A. Bidders shall carefully study and compare the Bidding Documents and compare various components of the Bidding Documents with each other, shall examine the site and local conditions and shall at once report to the Project Manager any errors, inconsistencies or ambiguities discovered.

B. Bidders requiring clarification or interpretation of the Bidding Documents shall make a written request to the Project Manager by 3:00 PM at least five (5) calendar days prior to the date for receipt of Bids. E-mail requests are required and should be addressed to gregg.blaize@cityofmobile.org.

C. Interpretations, corrections and changes to the Bidding Documents will be made by a formal, written Addendum. Interpretations, corrections and changes to the Bidding Documents made in any other manner will not be binding, and Bidders shall not rely on them.

D. Any discrepancy not resolved prior to Bidding shall be bid by the Contractor to provide for the most costly and/or restrictive interpretation of the documents.

3. BIDDING PROCEDURES:

A. No Bid will be considered unless made out and submitted on a copy of the Bid Form as set forth by the Bid Documents.

B. All blanks on the Bid Form shall be legibly executed in a non-erasable medium.

C. Sums shall be expressed in both words and figures. In case of discrepancy, the amount written in words shall govern.

D. Interlineations, alterations and erasures must be initialed by the signer of the Bid.

E. All requested Alternates, Unit Prices and Allowances shall be bid as indicated on the Bid Form and the Bid Documents.

F. Addenda shall be considered as a part of the Bid Documents and those issued

prior to the opening of Bids shall be acknowledged on the Bid Form and any adjustment in cost shall be included in the Contract Sum.

4. BID SECURITY:

   A. A Cashier's Check drawn on a bank registered to do business in the State of Alabama and which is a member of the Federal Deposit Insurance Corporation or Bid Bond payable to Owner, City of Mobile, in the amount of 5% of the Base Bid, but in no event more than $10,000.00, must accompany bid. By submitting a Bid Security, the Bidder pledges to enter into a Contract with the City of Mobile on the terms stated in the Bid, and will, if required, furnish bonds covering faithful performance of the Contract and required insurance certificate. Should the Bidder refuse to enter into such Contract or fail to furnish such bonds or insurance or any other required document, the amount of the Bid security shall be forfeited to the Owner as liquidated damages, not as a penalty.

   B. Bid Bond shall be valid for a minimum of sixty (60) days from the date of the Bid. The Owner reserves the right to retain the security of all Bidders until the successful Bidder enters into the Contract or until (60) days after Bid opening, whichever is sooner.

   C. Bonds must be issued by a Surety licensed to do business in the State of Alabama. If the project cost is more than $50,000.00 the Surety must have a minimum rating of A/Class VI as reported by the latest issue of Best's Key Rating Guide Property-Casualty published by Alfred M. Best Company, Inc.

   D. Power of Attorney is required for all Bonds.

5. EXAMINATION OF DOCUMENTS AND SITE WORK:

   A. Before submitting a Bid, Bidders should carefully examine the Bid Documents, visit the site of the Work, including attendance at the MANDATORY Pre-Bid conference, fully inform themselves as to existing conditions and limitations, and include in the Bid a sum to cover the cost of all items included in the Contract and necessary to perform the Work. The submission of a Bid will be considered as conclusive evidence that the Bidder has made such examination.

6. SUBMISSION OF BIDS:

   A. Bid, with Bid Security, Sales Tax Form C-3A, and other supporting data specified, shall be contained in a sealed, opaque envelope, approximately 9x12 inches or larger and be marked on the outside with the words "SEALED BID FOR THE CITY OF MOBILE CIVIC CENTER COOLING TOWER REPLACEMENT INSTALLATION LABOR- PROJECT NUMBER: CC-031-23 REBID", the Bid Date, and Contractor's name, address, and City of Mobile Business License number. And, if bidding in an amount $50,000 or greater, the State of Alabama General Contractor's License number and classification of the Bidder issued by the State of Alabama Licensing Board for General Contractors shall be written on the envelope.

B. Bids shall be deposited at the designated location prior to the time and date for receipt of Bids. Bids received after the time and date specified in the Invitation to Bid, or as modified by Addendum, will not be considered. Late Bids will be returned to the Bidder unopened.

C. The Bidder shall assume full responsibility for timely delivery at the location designated for receipt of Bids.

D. Oral, telephonic, facsimile or other electronically transmitted bids will not be considered.

7. MODIFICATION OR WITHDRAWAL OF BIDS:

A. A Bid may not be modified, withdrawn, or canceled by the Bidder for a period of sixty (60) days following the time and date designated for receipt of bids, and each Bidder so agrees in submitting a Bid.

8. CONSIDERATION AND AWARD OF BIDS:

A. At the discretion of the City, the properly identified Bids received on time will be publicly opened and will be read aloud.

B. The City shall have the right to reject any and all Bids. A Bid not accompanied by a required Bid security or a Bid which is in any way incomplete or irregular is subject to rejection.

C. It is the intent of the City to award a Contract to the lowest qualified Bidder provided the Bid has been submitted in accordance with the requirements of the Bidding Documents and does not exceed the funds available. The City shall have the right to waive informalities and irregularities in a Bid received and to accept the Bid which, in the City's judgment, is in the City's best interest.

D. The award shall be based on the lowest Total Bid for the Base Bid and any allowances, plus any alternates that may be accepted, as listed on the Bid Form.

9. PROOF OF COMPETENCY OF BIDDER:

A. Bidders may be required to furnish evidence satisfactory to the City of Mobile that they have sufficient means and experience in the types of work called for to assure the completion of the Contract in a satisfactory manner.

10. SIGNING OF CONTRACT:

A. The Standard Agreement between the City of Mobile and the Contractor, included herein, shall serve as the Agreement between the City and the Contractor.

B. The Bidder to whom the Contract is awarded shall, within ten (10) calendar days of receiving the Contract Forms, properly execute and deliver to the Owner, the following items with the signed Agreement:

(1). Performance Bond and Labor and Material Payment Bond (originals);
(2). Certificate of Insurance (original) with endorsements to City of Mobile;

(3). Evidence of enrollment in the E-Verify program.
(4). Other documentation as required by the Contract Documents.

C. Failure or refusal to sign the Agreement or to provide Certificates of Insurance in a form satisfactory to the City of Mobile, E-Verify verification, or other required documentation, shall subject the Bidder to immediate forfeiture of Bid Security.

D. On all documents: City of Mobile Business License, the Alabama Secretary of State Business Identity, the Alabama Secretary of State Certificate of Authority (out of state contractors), E-verify documentation, and ACORD Insurance Form, the Contractors name shall be EXACTLY the same.

11. NONDISCRIMINATION:

A. Contractor shall comply with all Federal, State and local laws concerning discrimination, including Section 14.1 and Section 14.2, Code of the City of Mobile, adopted December 10, 1991.

12. AMERICANS WITH DISABILITIES ACT (ADA):

A. Bidders shall comply with the provisions of the Americans with Disabilities Act (ADA) of 1990 which prohibits discrimination against individuals with disabilities.

13. USE OF DOMESTIC PRODUCTS:

A. Section 39-3-1, Alabama Code, 1975, provides that the Contractor agree, in the execution of this Contract, to use materials, supplies and products manufactured, mined, processed or otherwise produced in the United States or its territories, if available at reasonable prices, and that breach of this Agreement by the Contractor shall result in the assessment of liquidated damages in an amount not less than $500.00 nor more than twenty (20) percent of gross amount of the Contract Price.

14. NON-RESIDENT (OUT OF STATE) CONTRACTORS:

A. Preference to Resident Contractors: Section 39-3-5, Code of Alabama, 1975, provides that a non-resident (out of State) bidder domiciled in a state which grants a preference to local Contractors is to be awarded a public contract on the same basis as the non-resident bidder's state awards contracts to Alabama bidders. Alabama bidders are given a preference to the same extent that a non-resident bidder receives a preference in his home state. A non-resident bidder must include with any written bid documents a written opinion of an attorney licensed to practice in the non-resident bidder's state declaring what preferences, if any, exists in the non-resident's state.

B. Certificate of Authority: All non-resident (out of State) corporations must register with the Secretary of State and obtain a Certificate of Authority before doing business in the State of Alabama. Out of state Bidders should register and

secure the required Certificate before submitting a Bid. The account number shall be included on the Bid Form.

15. ALABAMA IMMIGRATION ACT:

A. The State of Alabama Immigration Law (Act No. 2011-535 as amended by Act No. 2012-491), requires that Contractors not violate federal immigration law or knowingly employ, hire for employment, or continue to employ an unauthorized alien within the State of Alabama. In addition, Contractors are required to enroll in the federal E-Verify program and submit verification of enrollment to the City of Mobile within ten (10) days of receiving the contract forms (see Section 00600).

16. CITY OF MOBILE BUSINESS LICENSE:

A. A City of Mobile Business License is required and must be current at time of contract award and throughout contract period.

17. CITY OF MOBILE CONTRACTOR'S BUSINESS LICENSE:

A. A City of Mobile Contractor's Business License is required and must be current at time of contract award and throughout contract period.

B. Contractor must qualify and post a $10,000 surety bond with the Land Use/Code Administration Department before a Contractor's Business License will be issued by the Revenue Department. Information on the City Contractor's License may be obtained by writing or calling:

Land Use/Code Administration
P.O. Box 1827
Mobile, Alabama 36633-1827
Phone: 251-208-7421

Revenue Department
P.O. Box 1827
Mobile, Alabama 36633-1827
Phone: 251-208-7461

18. CITY OF MOBILE BUILDING PERMIT:

A. All City of Mobile Permits are required and shall be obtained from the City of Mobile, but at no cost to the Contractor.

B. Contractor is responsible for ensuring that all inspections are successfully performed in accordance with City of Mobile regulations.

19. CONSTRUCTION SCHEDULE AND ACCESS:

A. The project shall be completed within Five (5) days from the date indicated by the Notice to Proceed. Contract days are defined as 'calendar days', which **include** weekends and holidays.

B. The Civic Center will remain in use throughout the Construction period and the Contractor is directed to coordinate all areas of work and scheduling of work with the Owner. Within five days of the bid opening, the Apparent Low Bidder Contractor shall meet with the Owner to discuss Owner scheduling and priorities. Apparent Low Bidder shall then provide a proposed schedule within 5 calendar days of the initial meeting for Owner review and approval.

C. Contractor shall have access to the Civic Center as approved by the Owner, but typically **Monday through Friday from 7:00A.M. to 6:00 P.M**. Contractor is directed to coordinate all areas of work and scheduling with the Owner. After hours and weekend work will require prior approval of the Civic Center Staff and may require hiring of a guard at the contractor's expense.

D. The Contractor may be allowed additional construction days due to inclement conditions ("rain days") only as such are appropriately documented and are in excess of the NOAA/National Weather Service average (previous 5 years) for the given month. A "rain day" is defined as more than a "trace" (0.10") of rain falling within a given 24 hour period. The Contractor shall provide documentation and formally request any "rain days" they feel are legitimately due. Documentation shall be submitted to the Project Manager, in writing, within ten (10) calendar days of the rain event. Claim shall include documentation of trades adversely impacted and the impacted activities of each trade.

20. SITE CONSIDERATIONS:

A. It is the Contractor's responsibility to carefully remove and store any items not permanently installed within the work areas. It is recommended that the Contractor photograph, videotape or in some manner document any features to be removed and their condition, prior to removal.

B. Noise and strong smells shall be isolated or kept to a minimum when adjacent portions of the site are occupied.

C. Contractor shall be responsible to leave the work area and adjacent site clear of equipment and debris, etc. at the end of each work day. All final cleaning is the responsibility of the Contractor and shall be executed prior to acceptance for reuse of any portion of the site.

D. A dumpster and lay down area for Contractor materials and staging may be located at the site and located per the direction of the Owner. The Contractor is responsible for the removal of the dumpster, any storage containers and any security fencing, temporary erosion control (BMPs), etc. as soon as practical after their use by the Contractor or the work is complete.

21. SALES AND USE TAX EXEMPTION:

A. As per the State of Alabama ACT 2013-205, the Alabama Department of Revenue (ADOR) has been granted the authority to issue a "Certificate of Exemption from Sales and Use Tax for Governmental Entities" on construction projects. Therefore,

this project shall qualify for State of Alabama Sales and Use Tax Exemptions under this ACT. It is the responsibility of the Bidder to confirm the potential tax exempt status of their bid with the ADOR and include any such savings in their bid, as well as accounting for same on their bid form attachment Sales Tax Form C-3A.

B. The full text of ACT 2013-205 is available on the State of Alabama Building Commission web-site at www.bc.alabama.gov .

22. SUBMISSION OF LIEN WAIVERS

A. At each monthly Application for Payment submitted to the owner, the Contractor shall provide completed lien waivers, including those from Subcontractors and material suppliers.

23. NOTICE OF COMPLETION:

A. For Contracts $50,000 or less:
Contractor shall provide proof of publication of Notice of Completion one time in a local newspaper, as required in the Title 39, Section 39-1-1, Subsection (g), of the Code of Alabama. Contractor shall also provide an electronic or hard copy of advertisement verbiage to the City of Mobile on Contractor letterhead for public posting for one week. This advertisement shall not begin until the Project has been accepted by the City of Mobile.

B. For Contracts $50,000 or greater:
Contractor shall provide proof of publication of Notice of Completion four successive weeks in a local newspaper, as required in the Title 39, Section 39-1-1, Subsection (f), of the Code of Alabama. This advertisement shall not begin until the Project has been accepted by the City of Mobile.

C. Notice of Completion advertisement shall read as follows:

STATE OF ALABAMA

COUNTY OF MOBILE

NOTICE OF COMPLETION
In accordance with Chapter 1, Title 39, Code of Alabama, 1975, NOTICE IS HEREBY given that (COMPANY NAME) has completed the contract for City of Mobile Civic Center Cooling Tower Replacement Labor Installation - CC-031-23 REBID, in Mobile, Alabama. All persons having any claims for labor, material or otherwise in connection with this project should immediately notify the Architectural Engineering Department, City of Mobile, P.O. Box 1827, Mobile, Alabama 36633-1827.

C. Advertisement shall not begin until the Project has been accepted by the City of Mobile as Substantially Complete.

24. CONTRACTOR WARRANTY AND CERTIFICATION:

A. Upon completion of the contract, the Contractor shall certify under oath that all bills have been paid in full.

B. Contractor shall provide a one year Labor Warranty on company letterhead in addition to other warranties required by the Bid Documents.

25. LIQUIDATED DAMAGES

A. A time charge equal to Two Hundred Fifty Dollars ($250.00) per calendar day will be made against the Contractor for the entire period that any part of the Work remains uncompleted, or any required closeout documents are not acceptably submitted, for more than thirty (30) calendar days after the time specified for the Substantial Completion for the Work, the amount of which shall be deducted by the owner, and shall be retained by the Owner out of monies otherwise due the Contractor I the final payment, not as a penalty, but as liquidated damages sustained.

END OF SECTION

SECTION 00300

SUPPLEMENTARY INSTRUCTIONS TO BIDDERS

THE ATTENTION OF ALL BIDDERS IS CALLED TO THE FOLLOWING INSTRUCTIONS AND CONDITIONS:

1. BIDDING DOCUMENTS

   A. Bidders may obtain complete sets of Bid Documents and Specifications (Project Manual) from the Department of Architectural Engineering as listed in the Invitation to Bid.

   B. Bidders shall use the complete set of documents in preparing their bid. The City of Mobile assumes no responsibility for errors or misinterpretations resulting from use of an incomplete set of documents.

2. INTERPRETATION OF BID DOCUMENTS:

   A. Bidders shall carefully study and compare the Bidding Documents and compare various components of the Bidding Documents with each other, shall examine the site and local conditions and shall at once report to the Project Manager any errors, inconsistencies or ambiguities discovered.

   B. Bidders requiring clarification or interpretation of the Bidding Documents shall make a written request to the Project Manager by 12:00 PM at least five (5) calendar days prior to the date for receipt of Bids. E-mail requests are required and should be addressed to **gregg.blaize@cityofmobile.org**

   C. Interpretations, corrections and changes to the Bidding Documents will be made by a formal, written Addendum. Interpretations, corrections and changes to the Bidding Documents made in any other manner will not be binding, and Bidders shall not rely on them.

   D. Any discrepancy not resolved prior to Bidding shall be bid by the Contractor to provide for the most costly and/or restrictive interpretation of the documents.

3. BIDDING PROCEDURES:

   A. No Bid will be considered unless made out and submitted on a copy of the Bid Form as set forth by the Bid Documents.

   B. All blanks on the Bid Form shall be legibly executed in a non-erasable medium.

   C. Sums shall be expressed in both words and figures. In case of discrepancy, the amount written in words shall govern.

   D. Interlineations, alterations and erasures must be initialed by the signer of the Bid.

   E. All requested Alternates, Unit Prices and Allowances shall be bid as indicated on the Bid Form and the Bid Documents.

F. Addenda shall be considered as a part of the Bid Documents and those issued prior to the opening of Bids shall be acknowledged on the Bid Form and any adjustment in cost shall be included in the Contract Sum.

4. BID SECURITY:

A. A Cashier's Check drawn on a bank registered to do business in the State of Alabama and which is a member of the Federal Deposit Insurance Corporation, or Bid Bond payable to Owner, City of Mobile, in the amount of 5% of the Base Bid, but in no event more than $10,000.00, must accompany bid. By submitting a Bid Security, the Bidder pledges to enter into a Contract with the City of Mobile on the terms stated in the Bid, and will, if required, furnish bonds covering faithful performance of the Contract and required insurance certificate. Should the Bidder refuse to enter into such Contract or fail to furnish such bonds or insurance or any other required document, the amount of the Bid security shall be forfeited to the Owner as liquidated damages, not as a penalty.

B. Bid Bond shall be valid for a minimum of sixty (60) days from the date of the Bid. The Owner reserves the right to retain the security of all Bidders until the successful Bidder enters into the Contract or until (60) days after Bid opening, whichever is sooner.

C. Bonds must be issued by a Surety licensed to do business in the State of Alabama. If the project cost is more than $50,000.00 the Surety must have a minimum rating of A/Class VI as reported by the latest issue of Best's Key Rating Guide Property-Casualty published by Alfred M. Best Company, Inc.

D. Power of Attorney is required for all Bonds.

E. The Surety company shall be required to execute AIA Document G-707, "Consent of Surety to Final Payment" prior to Final Payment of retainage being made to the Contractor.

5. EXAMINATION OF DOCUMENTS AND SITE WORK:

A. Before submitting a Bid, Bidders should carefully examine the Bid Documents, visit the site of the Work, including attendance at the Pre-Bid conference, fully inform themselves as to existing conditions and limitations, and include in the Bid a sum to cover the cost of all items included in the Contract and necessary to perform the Work. The submission of a Bid will be considered as conclusive evidence that the Bidder has made such examination.

6. SUBMISSION OF BIDS:

A. Bid, with Bid Security, Sales Tax Form C-3A, and other supporting data specified, shall be contained in a sealed, opaque envelope, approximately 9x12 inches or larger and be marked on the outside with the words **"SEALED BID FOR**

MOBILE CIVIC CENTER COOLING TOWER REPLACEMENT-INSTALLATION LAOBR- PROJECT NUMBER: CC-031-23 REBID", the Bid Date, and Contractor's name, address, and City of Mobile Business License number. And, if bidding in an amount $50,000 or greater, the State of Alabama General Contractor's License number and classification of the Bidder issued by the State of Alabama Licensing Board for General Contractors shall be written on the envelope.

B. Bids shall be deposited at the designated location prior to the time and date for receipt of Bids. Bids received after the time and date specified in the Invitation to Bid, or as modified by Addendum, will not be considered. Late Bids will be returned to the Bidder unopened.

C. The Bidder shall assume full responsibility for timely delivery at the location designated for receipt of Bids.

D. Oral, telephonic, facsimile or other electronically transmitted bids will not be considered.

7. MODIFICATION OR WITHDRAWAL OF BIDS:

A. A Bid may not be modified, withdrawn, or canceled by the Bidder for a period of sixty (60) days following the time and date designated for receipt of bids, and each Bidder so agrees in submitting a Bid.

8. CONSIDERATION AND AWARD OF BIDS:

A. At the discretion of the City, the properly identified Bids received on time will be publicly opened and will be read aloud.

B. The City shall have the right to reject any and all Bids. A Bid not accompanied by a required Bid security or a Bid which is in any way incomplete or irregular is subject to rejection.

C. It is the intent of the City to award a Contract to the lowest qualified Bidder provided the Bid has been submitted in accordance with the requirements of the Bidding Documents and does not exceed the funds available. The City shall have the right to waive informalities and irregularities in a Bid received and to accept the Bid which, in the City's judgment, is in the City's best interest.

D. The award shall be based on the lowest Total Bid for the Base Bid and any allowances, plus any alternates and/or options that may be accepted, as listed on the Bid Form.

9. PROOF OF COMPETENCY OF BIDDER:

A. Bidders may be required to furnish evidence satisfactory to the City of Mobile that they have sufficient means and experience in the types of work called for to assure the completion of the Contract in a satisfactory manner.

10. SIGNING OF CONTRACT:

A. The Standard Agreement between the City of Mobile and the Contractor, included herein, shall serve as the Agreement between the City and the Contractor.

B. The Bidder to whom the Contract is awarded shall, within ten (10) calendar days of receiving the Contract Forms, properly execute and deliver to the Owner, the following items with the signed Agreement:
   (1). Performance Bond and Labor and Material Payment Bond (originals);
   (2). Certificate of Insurance (original) with endorsements to City of Mobile;
   (3). Evidence of enrollment in the E-Verify program.
   (4). Other documentation as required by the Contract Documents.

C. Failure or refusal to sign the Agreement or to provide Certificates of Insurance in a form satisfactory to the City of Mobile, E-Verify verification, or other required documentation, shall subject the Bidder to immediate forfeiture of Bid Security.

D. On all documents: City of Mobile Business License, the Alabama Secretary of State Business Identity, the Alabama Secretary of State Certificate of Authority (out of state contractors), E-verify documentation, and ACORD Insurance Form, the Contractor's name shall be EXACTLY the same.

11. NONDISCRIMINATION:

A. Contractor shall comply with all Federal, State and local laws concerning nondiscrimination, including but not limited to City of Mobile Ordinance No. 14-034 which requires, inter alia, that all contractors performing work for the City of Mobile not discriminate on the basis of race, creed, color, national origin or disability, require that all subcontractors they engage do the same, and make every reasonable effort to assure that fifteen percent of the work performed under contract be awarded to socially and economically disadvantaged individuals and business entities.

12. AMERICANS WITH DISABILITIES ACT (ADA):

A. Bidders shall comply with the provisions of the Americans with Disabilities Act (ADA) of 1990 which prohibits discrimination against individuals with disabilities.

13. USE OF DOMESTIC PRODUCTS:

A. Section 39-3-1, Alabama Code, 1975, provides that the Contractor agree, in the execution of this Contract, to use materials, supplies and products manufactured, mined, processed or otherwise produced in the United States or its territories, if available at reasonable prices, and that breach of this Agreement by the Contractor shall result in the assessment of liquidated damages in an amount not less than $500.00 nor more than twenty (20) percent of gross amount of the Contract Price.

14. NON-RESIDENT (OUT OF STATE) CONTRACTORS:

A. Preference to Resident Contractors: Section 39-3-5, Code of Alabama, 1975, provides that a non-resident (out of State) bidder domiciled in a state which grants a preference to local Contractors is to be awarded a public contract on the same basis as the non-resident bidder's state awards contracts to Alabama bidders. Alabama bidders are given a preference to the same extent that a non-resident bidder receives a preference in his home state. A non-resident bidder must include with any written bid documents a written opinion of an attorney licensed to practice in the non-resident bidder's state declaring what preferences, if any, exists in the non-resident's state.

B. Certificate of Authority: All non-resident (out of State) bidders shall be registered with the Alabama Secretary of State and the Alabama Department of Revenue prior to submitting a Bid. Provide the Secretary of State Business "Entity ID Number" on the Bid Form in the space provided.

15. ALABAMA IMMIGRATION ACT:

A. The State of Alabama Immigration Law (Act No. 2011-535 as amended by Act No. 2012-491), requires that Contractors not violate federal immigration law or knowingly employ, hire for employment, or continue to employ an unauthorized alien within the State of Alabama. In addition, Contractors are required to enroll in the federal E-Verify program and submit verification of enrollment to the City of Mobile within ten (10) days of receiving the contract forms (see Section 00 60 00).

16. CITY OF MOBILE BUSINESS LICENSE:

A. A City of Mobile Business License is required and must be current at time of contract award and throughout contract period.

17. CITY OF MOBILE CONTRACTOR'S BUSINESS LICENSE:

A. A City of Mobile Contractor's Business License is required and must be current when contractor signs the contract and throughout contract period.

B. Contractor must qualify and post a $10,000 surety bond with the Land Use/Code Administration Department before a Contractor's Business License will be issued by the Revenue Department. Information on the City Contractor's License may be obtained by writing or calling:

Land Use/Code Administration
P.O. Box 1827
Mobile, Alabama 36633-1827
Phone: 251-208-7421

Revenue Department
P.O. Box 1827
Mobile, Alabama 36633-1827
Phone: 251-208-7461

18. CITY OF MOBILE BUILDING PERMIT:

A. A City of Mobile Building Permit, City of Mobile Development Permit AND Certificate of Appropriateness is required and shall be obtained from the Land Use/Code Administration Department, but at no cost to the Contractor.

B. Contractor is responsible for ensuring that all inspections are successfully performed in accordance with City of Mobile regulations.

19. CONSTRUCTION SCHEDULE AND ACCESS:

A. The project shall be completed within Five (**5**) calendar days from the date indicated by the Notice to Proceed.

B. The Western Administration Complex (WAC) will remain in use throughout the Construction period and the Contractor is directed to coordinate all areas of work and scheduling of work with the Owner. Any interruptive work (A/C or power disconnect / re-connect, etc.) shall be coordinated with the Owner prior to the beginning of the work. There shall be no interruption of service to the building during any scheduled event. Within five (5) days of the bid opening, the Apparent Low Bidder Contractor shall meet with the Owner to discuss Owner scheduling and priorities. Apparent Low Bidder shall then provide a proposed schedule within 5 calendar days of the initial meeting for Owner review and approval.

C. Contractor shall have access to the site as approved by the Owner, but typically **seven days a week from 7:00 A.M. to 6:00 P.M.** Contractor is directed to coordinate all areas of work and scheduling with the Owner. After hours work will require prior approval of the Project Manager and may require hiring of a guard at the contractor's expense.

D. The Contractor may be allowed additional construction days due to inclement conditions ("rain days") only as such are appropriately documented and are in excess of the NOAA/National Weather Service average (previous 5 years) for the given month. A "rain day" is defined as more than a "trace" (0.10") of rain falling within a given 24 hour period. The Contractor shall provide documentation and formally request any "rain days" they feel are legitimately due. Documentation shall be submitted to the Project Manager, in writing, within ten (10) calendar days of the rain event. Claim shall include documentation of trades adversely impacted and the impacted activities of each trade.

20. SITE CONSIDERATIONS:

A. It is the Contractor's responsibility to carefully remove and store any items not permanently installed within the work areas. It is recommended that the Contractor photograph, videotape or in some manner document any features to be removed and their condition, prior to removal.

B. Noise and strong smells shall be isolated or kept to a minimum when adjacent portions of the site are occupied.

C. Contractor shall be responsible to leave the work area and adjacent site clear of equipment and debris, etc. at the end of each work day. All final cleaning is the responsibility of the Contractor and shall be executed prior to acceptance for reuse of any portion of the site.

D. A dumpster and lay down area for Contractor materials and staging may be located at the site and located per the direction of the Owner. The Contractor is responsible for the removal of the dumpster, any storage containers and any security fencing, temporary erosion control (BMPs), etc. as soon as practical after their use by the Contractor or the work is complete.

21. SALES AND USE TAX EXEMPTION:

A. As per the State of Alabama ACT 2013-205, the Alabama Department of Revenue (ADOR) has been granted the authority to issue a "Certificate of Exemption from Sales and Use Tax for Governmental Entities" on construction projects. Therefore, this project shall qualify for State of Alabama Sales and Use Tax Exemptions under this ACT. It is the responsibility of the Bidder to confirm the potential tax exempt status of their bid with the ADOR and include any such savings in their bid, as well as accounting for same on their bid form attachment Sales Tax Form C-3A.

B. The full text of ACT 2013-205 is available on the State of Alabama Building Commission web-site at www.bc.alabama.gov .

22. SUBMISSION OF LIEN WAIVERS:

A. At each monthly Application for Payment submitted to the owner, the Contractor shall provide completed lien waivers, including those from Subcontractors and material suppliers.

23. NOTICE OF COMPLETION:

A. For Contracts $50,000 or greater:
Contractor shall provide proof of publication of Advertisement of Completion for four consecutive weeks in a local newspaper, as required in the Title 39, Section 39-1-1, Subsection (f), of the Code of Alabama. This Advertisement shall not begin until the Project has been accepted by the City of Mobile.

B. Notice of Completion advertisement shall read as follows:

STATE OF ALABAMA

COUNTY OF MOBILE

NOTICE OF COMPLETION
In accordance with Chapter 1, Title 39, Code of Alabama, 1975, NOTICE IS HEREBY given that (COMPANY NAME) has completed the contract for Mobile Civic Center- Cooling Tower Replacement- Installation Labor – CC-031-23 REBID, Mobile, Alabama 36608. All persons having any claims for labor, material or otherwise in connection with this project should immediately notify the Architectural Engineering Department, City of Mobile, P.O. Box 1827, Mobile, Alabama 36633-1827.

C. Advertisement shall not begin until the Project has been accepted by the City of Mobile as Substantially Complete.

24. CONTRACTOR WARRANTY AND CERTIFICATION:

A. Upon completion of the contract, the Contractor shall certify under oath that all bills have been paid in full.

B. Contractor shall provide a one year Labor Warranty on company letterhead in addition to other warranties required by the Bid Documents.

25. LIQUIDATED DAMAGES

A. A time charge equal to Two Hundred Fifty Dollars ($250.00) per calendar day will be made against the Contractor for the entire period that any part of the Work remains uncompleted, or any required closeout documents are not acceptably submitted, for more than thirty (30) calendar days after the time specified for the Substantial Completion for the Work, the amount of which shall be deducted by the owner, and shall be retained by the Owner out of monies otherwise due the Contractor in the final payment, not as a penalty, but as liquidated damages sustained.

END OF SECTION

SECTION 00400

BID FORM

Copies of the following Bid Forms shall be used. Bids submitted on alternate forms may be rejected. Fill in all blank spaces with an appropriate entry. Bid Form must be signed by an officer of the company and notarized.

TO: City of Mobile, 205 Government St., P.O. Box 1827, Mobile, AL, 36633

REF: PROJECT NO.: CC-031-23 REBID
PROJECT NAME: Cooling Tower Replacement- Installation Labor
PROJECT LOCATION: Mobile Civic Center
401 Civic Center Drive

In compliance with the Bid Documents and having carefully and thoroughly examined said documents for the subject Work prepared by the City of Mobile, Architectural Engineering Department and Consultant dated June 2, 2023; and all Addendum (a) Number(s) _____, dated _____, 2023 (CAUTION: before submitting any bid it is the Bidder's responsibility to check with the Architectural Engineering Department for all Addenda or special instructions that may impact the Bid) thereto, receipt of which is hereby acknowledged, the premises and all conditions affecting the Work prior to making this Proposal, the Undersigned Bidder, hereby

COMPANY NAME:_____

ADDRESS:_____PHONE_____

ALABAMA GENERAL CONTRACTOR LICENSE NO. _____

CITY OF MOBILE BUSINESS LICENSE NO._____

SECRETARY OF STATE OF ALABAMA BUSINESS IDENTITY NO._____

SECRETARY OF STATE OF ALABAMA ACCOUNT NO._____

(Note: Secretary of State Account Number shall be filled in only by non-resident bidders)

(Check one) [ ] A Corporation [ ] A Partnership [ ] An Individual Doing Business

hereby proposes to furnish all labor, materials, tools, equipment, and supplies and to sustain all the expenses incurred in performing the Work on the above captioned Project in accordance with the terms of the Contract Documents, and all applicable laws and regulations for the sum listed below. The initial term of the Contract shall extend for sixty (60) calendar days from the date of the Notice to Proceed.

Base Bid:		**$ .00**
Contingency Allowance:	**+**	**$ 1,000.00**
Total Base Bid:		**$ .00**

(Fill in here and in Total Bid below)

TOTAL BASE BID: _____

_____ Dollars, ($ **.00**)
(Amount in Words) (Amount in Figures)

(Note: Show amount in both words and figures. In case of discrepancy, the amount in words shall govern). **Bids shall be provided in whole dollar amount with no cents.**

CONTINGENCY ALLOWANCE: $1,000.00 lump sum Contingency Allowance shall be included in the Total Bid for work related to unforeseen conditions as approved by the Owner.

BID SECURITY: The undersigned Bidder agrees that the attached Bid Security, as a Cashier's Check drawn on a bank registered to do business in the State of Alabama and which is a member of the Federal Deposit Insurance Corporation, or a Bid Bond, made payable to the City of Mobile, in the amount of 5% of the bid amount, but in no event more than $10,000, as the proper measure of liquidated damages which the City will sustain by the failure of the undersigned to execute the Contract. Said Bid Security shall become the property of the City of Mobile as liquidated damages as specified in the Contract Documents.

AMERICANS WITH DISABILITIES ACT (ADA): The undersigned Bidder agrees to fully comply with all requirements of the Americans with Disabilities Act of 1990 and the Amendment Act.

NONDISCRIMINATION: Contractor shall comply with all Federal, State and local laws concerning nondiscrimination, including but not limited to City of Mobile Ordinance No. 14-034 which requires, *inter alia*, that all contractors performing work for the City of Mobile not discriminate on the basis of race, creed, color, national origin or disability, require that all subcontractors they engage do the same, and make every reasonable effort to assure that fifteen percent of the work performed under contract be awarded to socially and economically disadvantaged individuals and business entities.

SIGNATURE: If the undersigned Bidder is incorporated, the entire legal title of the company followed by "a corporation" should be used. If Bidder is an individual, then that individual's full legal name followed by doing business as (d/b/a) and name of firm, if any, should be used. If Bidder is a partnership, then full name of each partner should be listed followed by "d/b/a" and name of firm, if any.

Ensure that name and exact arrangement thereof is the same on all forms submitted with this Bid. If a word is abbreviated in the official company name, such as "Co.", then use that abbreviation. If not abbreviated in the official name, spell out.

Bidder agrees not to revoke or withdraw this Bid until sixty (60) calendar days following the time and date for receipt of bids. If notified in writing of the acceptance of this Bid within this time period, Bidder agrees to execute a Contract based on this Bid on the proscribed form within ten (10) calendar days of said notification and to furnish Performance Bond and Materials and Payment Bond as specified.

COMPANY NAME:_____
(Printed or Typed)

BY:_____
(Signature of Company Officer)

COMPANY OFFICER:_____
(Printed or Typed)

TITLE_____ **DATE**_____**, 2023**
(Printed or Typed)

Sworn to and subscribed before me this _____ day of _____2023

_____
Notary Public

Attachments:
1. Bid Security, with Power of Attorney
2. Secretary of State Authorization (Out of state bidders only)
3. Sales Tax Form C-3A
4. Supplier Diversity Subcontracting & Major Supplier Plan

END OF BID FORM

ACCOUNTING OF SALES TAX
ATTACHMENT TO BID FORM SECTION 00400
SALES TAX FORM C-3A

To: City of Mobile **Date:**_____

Name of Project: Civic Center Cooling Tower Replacement- Installation Labor
Project Number: CC-031-23 REBID

SALES TAX ACCOUNTING

Pursuant to Act 2013-205, Section 1(g) the Contractor accounts for the sales tax NOT included in the bid proposal form as follows:

ESTIMATED SALES TAX AMOUNT

OPTION ONE BASE BID: $_____

Failure to provide an accounting of sales tax shall render the bid non-responsive. Other than determining responsiveness, sales tax accounting shall not affect the bid pricing nor be considered in the determination of the lowest responsible and responsive bidder.

Legal Name of Bidder_____

Mailing Address_____

***By (Legal Signature)**_____

*Name (type or print)_____ (Seal)

*Title_____

Telephone Number_____

AGREEMENT BETWEEN OWNER AND CONTRACTOR FOR A STIPULATED SUM (HEREINAFTER "AGREEMENT")

This Agreement made and entered into this_____.

BETWEEN the **Owner**: CITY OF MOBILE
205 Government Street
P. O. Box 1827
Mobile, Alabama 36633

And the **Contractor**:

City Business License No.:

Secretary of State Registration No.:

For the following **Project**: Mobile Civic Center Cooling Tower Replacement-Installation Labor
401 Civic Center Drive
Mobile, Alabama 36602

Project Number: CC-032-21 REBID

The Owner and Contractor agree as set forth below:

1.0 CONTRACTOR'S SERVICE

1.1 The Contractor's Services consist of those described in the Scope of Work, which is attached hereto as "Exhibit A" and is hereby incorporated as a part of this Agreement and as provided in the Request for Quotes documents that are hereby incorporated by reference as a part of this Agreement as though fully set out herein. The total contract amount is XXXX 00/100 Dollars ($XXX.00)

1.2 If Additional Services are required due to circumstances beyond the Contractor's control, the Contractor shall give written notice to the Owner and obtain written authorization from the Owner before commencing such Services. The Contractor's notice shall include a description of the circumstances justifying the "Additional Services" and a proposal to provide the Services.

1.3 ALLOWANCE

A. Contingency Allowance shall cover cost of material, labor, overhead, profit and other expenses for complete installation of items of additional Work as required for a complete, functional project. Contractor shall provide an itemized proposal including same for all Work. Contractor's charges for overhead and

profit are limited to 10% of labor, materials and equipment costs on subcontractor's work; and 15% on work of Contractor's own forces.

B. Contingency Allowance shall be used for unforeseen circumstances not covered in the construction documents. All extra work under this section must be authorized by the Owner, in writing, prior to ordering materials or undertaking work.

C. Upon completion of the Work, the unused portion of the Contingency Allowance shall be credited back to the Owner in the form of a Change Order.

2.0 OWNER'S REPRESENTATIVE

2.1 The Owner's Representative, authorized to act on the Owner's behalf with respect to the Project, is the Director of Real Estate Asset Management or the Director's designated representative. The Owner's liaison with the Contractor is the Owner's Representative.

3.0 GENERAL REQUIREMENTS

3.1 The Contractor shall deliver the Work complete within Five (5) calendar days from the date of the written Notice to Proceed.

3.2 The Owner and the Contractor, respectively, bind themselves, their partners, successors, assigns, and legal representatives to the other party to this Agreement, with respect to all covenants of this Agreement. Contractor shall not assign, sublet, or transfer its interest in this Agreement without written consent of the Owner, which consent will be granted or withheld at the Owner's sole discretion.

3.3 This Agreement represents the entire and integrated agreement between the Owner and Contractor and supersedes all prior negotiations, understandings or agreements either written or oral. The Owner and Contractor may amend this Agreement only by written instrument signed by both parties.

3.4 All covenants, agreements, and stipulations of this Agreement (except warranties) shall remain in full force until completion of the Project or for a period of two (2) years from the date of this Agreement, whichever occurs first. By mutual agreement, the Owner and the Contractor may extend the Agreement time.

3.5 LIQUIDATED DAMAGES

A time charge equal to Two Hundred Fifty and 00/100 Dollars ($250.00) per calendar day will be made against the Contractor for the entire period that any part of the Work remains incomplete or any closeout requirements are not acceptably submitted for more than thirty (30) calendar days after the time specified for the Substantial Completion of the Work. The amount of which shall be deducted by the Owner, and shall be retained by the Owner, out of monies otherwise due to the Contractor in the final payment, not as a penalty, but as liquidated damages sustained.

3.6. **INSURANCE**

For the term of this Agreement, Contractor shall acquire and maintain in full force and effect the following liability and comprehensive insurance issued by a company licensed and qualified to do business in the State of Alabama, ***which such insurance shall be endorsed to name the City of Mobile as an additional insured,*** and shall attach to this contract as proof thereof a certificate of insurance issued by an agent licensed and qualified to do business in the State of Alabama:

A. Workers' Compensation/Employer's Liability:

1. Workers' Compensation insurance in the amounts required by all applicable laws, rules or regulations of the state of Alabama.

2. Employer's Liability with limits of not less than:

Bodily Injury by Accident	$1,000,000 each accident
Bodily Injury by Disease	$1,000,000 policy limit
Bodily Injury by Disease	$1,000,000 each employee

B. Comprehensive General Liability Insurance

1. Comprehensive General Liability (occurrence form) including coverage for products/completed operations, independent contractors, and blanket contractual liability, specifically covering the obligations assumed by Contractor.

2. Limit of Liability: $1,000,000 combined single limit of liability each occurrence bodily injury or property damage. /$2,000,000 Aggregate on a "Per Project" Basis.

C. Automobile Liability Insurance:

1. Automobile Liability Insurance to cover any auto, including all owned, non-owned, and hired vehicles, with a $1,000,000 combined single limit of liability each accident for bodily injury and/or property damage.

D. Excess/Umbrella Liability Insurance

1. Providing following form coverage for Employer's Liability, Comprehensive General Liability, and Automobile Liability.

2. Limit of Liability: $2,000,000 combined single limit of liability each occurrence for bodily injury and/or property damage.

Waiver of Subrogation - All policies of insurance shall be endorsed to waive rights of subrogation in favor of City of Mobile.

Additional Insured - All policies of insurance, except those referenced under paragraph A, shall be endorsed to name City of Mobile as an Additional Insured

Primary Insurance - All policies of insurance, except those referenced under paragraph A, shall be endorsed to provide that all such insurances are primary and non-contributing with any other insurance maintained by City of Mobile.

Notice of Cancellation – Certificates shall provide that such insurance shall not be subject to cancellation, non-renewal nor material change without 30 days or more (except 10 days for non-payment) prior written notice thereof to the City of Mobile.

Certificates of Insurance – General – Within ten (10) calendar days from date of issuance of Contract forms for execution, Contractor shall deliver to the City of Mobile, certificates of insurance (standard ACORD format) certifying the existence and limits of the insurance coverages along with separate policy endorsements as described above. Contractor shall also be responsible for delivering policy renewal certificates to the City of Mobile.

If the certificate of insurance referenced in this Agreement does not evidence insurance of owned vehicles, said certificate and this sentence shall evidence the Contractor's covenant that it does not own any vehicles and that it will not purchase or obtain any vehicles during the term of this Agreement. Said certificate shall require that said insurance coverage will not be altered or terminated unless City shall have been given written notice of such alteration or termination delivered to City not less than thirty (30) days before the effective date of such alteration or termination.

3.7 In the event of any breach or apparent breach by Contractor of any of its obligations under the terms of this Agreement, and in the further event that City shall engage the services of an attorney to protect or to enforce its rights with respect to said breach or apparent breach, then and in those events, Contractor agrees to pay and to reimburse any and all reasonable attorneys' fees and expenses which City may incur with respect to City's enforcement of this Agreement; regardless of whether said attorneys' fees and costs shall be incurred in connection with any litigation or in connection merely with advice and representation provided without litigation.

3.8 **INDEMNIFICATION:** The Contractor shall indemnify, defend and hold harmless City and its officers, elected officials, agents, representatives, and employees in respect of any and all claims, injuries, losses, diminution in value, damages, liabilities, whether or not currently due, and related expenses (including without limitation, settlement costs and any legal or other expenses for investigating or defending any actions or threatened actions) arising from or in connection with the contractor's performance under this agreement, including but not limited to, environmental laws, regulations, orders and decrees of whatever character or nature and damage or injury to persons or property. Contractor hereby confirms and agrees that Contractor is not a 'design professional' as defined in Alabama Act 2021-318, and not required to carry professional liability insurance for the performance or obligations of this contract.

3.9 This Agreement shall be governed by the laws of the State of Alabama, and the appropriate venue for any actions arising out of this Agreement shall be a court of proper jurisdiction in Mobile, Alabama.

3.10 Contractor shall obtain, at his own expense, all necessary licenses, inspections, permits, insurance, authorization and assurances necessary in order to abide by the terms of this Agreement. City of Mobile department permits, when required, shall be obtained by the Contractor at no cost.

3.11 Contractor, in the performance of its operations and obligations hereunder, shall not be deemed to be an agent of City but shall be deemed to be an independent Contractor in every respect and shall take all steps at its own expense, as City may from time to time request, to indicate that it is an independent Contractor. City does

not and will not assume any responsibility for the means by which or the manner in which the services by Contractor provided for herein are performed, but on the contrary, Contractor shall be wholly responsible, therefore.

3.12 BEST MANAGEMENT PRACTICES (BMPs): The Contractor shall be responsible for providing, implementing, and maintaining BMPs for sediment and erosion control, and all other applicable regulations, in full compliance with Local, State, and Federal Codes and Ordinances throughout the contract period. All Work shall be in accordance with the Clean Water Act, the Alabama Water Pollution Control Act, the current version of the Alabama Handbook for Erosion Control, Sediment Control and Storm Water Management on Construction Sites and Urban Areas; and the current version of the Mobile, Alabama City Code Chapter 17 Storm Water Management and Flood Control. All waste water with oils, grease, etc., shall be properly contained and disposed of.

3.13 METHOD of PAYMENT: Contractor shall provide two notarized original signature copies of invoices to the Architectural Engineering Department on a monthly basis and/or upon successful completion of service. Contractor invoices shall be provided on AIA Document G702 and AIA Document G703. Final payment shall not be processed until all required Close-out Documents are submitted to and approved by the Owner.

3.14 TERMINATION of CONTRACT: The City may terminate the contract upon thirty (30) days written notice. Notice from the City shall be mailed to the address provided by the Contractor on this form. The City shall not be liable for payment to the Contractor for lost profit or damages as the result of its termination of the contract.

3.15 LABOR AND MATERIAL PAYMENT BOND and PERFORMANCE BOND

Shall each be for one hundred percent (100%) of the Contract Price if the Contract Price is greater than $10,000.00.

1. Cost of the bonds shall be included in the bid.
2. Bond shall be submitted with the executed agreement on provided form(s).
3. Power of Attorney is required for both bonds.
4. A Surety authorized to do business in the State of Alabama shall furnish both bonds.
5. A Surety licensed to do business in the State of Alabama must execute the bonds.

3.16 RETAINAGE

For each progress payment made prior to Substantial Completion of the Work, the Owner may withhold the following amount, as retainage, from the payment otherwise due:

Five percent (5%) of the first fifty percent (50%) of the completed work and after fifty percent (50%) completion has been accomplished, no further retainage shall be held from the original Contract Sum. Increases in the contract sum by Change Order shall also be subject to retainage.

The net amount of the Retainage shall be equal to two- and one-half percent (2.5%) of the total Contract Sum, as increased or decreased by Change Order.

3.17 PROOF OF ADVERTISEMENT of COMPLETION

(a) Contractor shall provide proof of publication of Notice of Completion in a locally published newspaper of general circulation, in accordance with Title 39, Section 39-1-

1 of the Code of Alabama. For final Contract Sums less than Fifty Thousand and 00/100 Dollars ($50,000.00), the Contractor shall also provide, at the same time notice is sent to the newspaper, an electronic or hard copy of notice verbiage on Contractor letterhead to the City of Mobile for public posting for one week. This Notice of Completion shall not begin until the project has been accepted by the City of Mobile.

(b) Notice of Completion advertisement shall read as follows:

STATE OF ALABAMA
COUNTY OF MOBILE
NOTICE OF COMPLETION
In accordance with Chapter I, Title 39, Code of Alabama, 1975, NOTICE IS HEREBY given that XXXX has completed the contract for Mobile Civic Center Cooling Tower Replacement – Installation Labor, 401 Civic Center Drive, Mobile, Alabama 36602. All persons having any claim for labor, material or otherwise in connection with this project should immediately notify the Architectural Engineering Department, City of Mobile, P. O. Box 1827, Mobile, AL 36633-1827.

3.18 CONTRACTOR WARRANTY and CERTIFICATION

A. Upon completion of the contract the Contractor shall certify under oath that all bills have been paid in full.

B. In addition to manufacturer warranties required by the Bid Documents, Contractor shall provide a one (1) year Labor and Materials Warranty on company letterhead at completion of the Contract.

4.0 CONTRACT DOCUMENTS

A. The contract documents consist of this Agreement, the Request for Quotes documents, Exhibit “A” Scope of Work, Addenda issued prior to the execution of the Contract, other documents listed in this Agreement, and Modifications issued after the execution of this Agreement, all of which form the Contract, and are fully a part of the Contract as if attached to this Agreement or repeated herein. The contract documents are intended to agree, and if clarification of a conflict has not been made via Addendum, then the most restrictive or costly interpretation by the Director of Real Estate Asset Management will apply.

B. An enumeration of the Contract Documents, other than a Modification, appears below:

1. Request for Quotes documents, dated June 2, 2023, as prepared by the City of Mobile Architectural Engineering Department
2. Bid Bond;
3. E-Verify Documentation;
4. Certificate of Insurance with endorsements; and
5. This Instrument (Agreement).
6. Exhibit “A” Scope of Work

5.0 DISPUTE RESOLUTION

Claims, disputes or other matters in question between the parties to this Agreement arising out of or relating to the Agreement or breach thereof shall be subject to legal proceedings unless the parties mutually agree otherwise.

6.0 FORCE MAJEURE

In the event that either party hereto shall be delayed or hindered in or prevented from the performance of any act required hereunder by reason of strikes, lockouts, labor troubles, inability to procure materials, failure of power, restrictive governmental laws or regulations, riots, insurrection, war, Act of God, or other reason of a like nature not the fault of the party delayed in performing work or doing acts required under the terms of this Agreement, then performance of such act shall be excused for the period of the delay and the period for the performance of any such act shall be extended for a period equivalent to the period of such delay.

7.0 NONDISCRIMINATION

A. Contractor shall comply with all Federal, State and local laws concerning nondiscrimination, including but not limited to City of Mobile Ordinance No. 14-034 which requires, *inter alia*, that all contractors performing work for the City of Mobile not discriminate on the basis of race, creed, color, national origin or disability, require that all subcontractors they engage do the same, and make every reasonable effort to assure that fifteen percent of the work performed under contract be awarded to socially and economically disadvantaged individuals and business entities.

B. Contractor shall abide by provisions of Mobile Ordinance No. 02-050 which prohibits discrimination in employment by Contractors and Subcontractors performing work for the City of Mobile.

8.0 NON-ASSIGNMENT: Neither this Agreement nor any rights under this Agreement may be assigned, by any party, without the prior written consent of the other party.

9.0 SEVERABILITY CLAUSE

In case any one or more of the provisions contained in this Agreement shall for any reason be held to be invalid, illegal or unenforceable in any respect, such invalidity, illegality or unenforceability shall not affect any other provisions of this Agreement, but this Agreement shall be construed as if such invalid or illegal or unenforceable provision had never been contained herein. Upon such determination that any term or other provision is invalid, illegal or unenforceable, the court or other tribunal making such determination is authorized and instructed to modify this Agreement so as to effect the original intent of the parties as closely as possible so that the transactions and agreements contemplated herein are consummated as originally contemplated to the fullest extent possible.

10.0 IMMIGRATION LAWS

By signing this contract, the contracting parties affirm, for the duration of the agreement, that they will not violate federal immigration law or knowingly employ, hire for employment, or continue to employ an unauthorized alien within the State of Alabama. Furthermore, a contracting party found to be in violation of this provision shall be deemed in breach of the agreement and shall be responsible for all damages resulting therefrom.

11.0 Public Contracts with Entities in Certain Boycott Activities

By signing this contract, the Contractor further represents and agrees that it is not currently engaged in, nor will it engage in, any boycott of a person or entity based in or

doing business with a jurisdiction with which the State of Alabama can enjoy open trade.

REMAINDER OF PAGE INTENTIONALLY LEFT BLANK

IN WITNESS WHERE OF, the parties to these presents have hereunto set their hand and seal; the Mayor of the City of Mobile, acting under and by virtue of such office and with full

authority and the Contractor by such duly authorized officers or individuals as may be required by law.

This Agreement entered into as of the day and year first written above.

OWNER: City of Mobile

_____
Signature

William S. Stimpson, Mayor
Printed Name and Title

Legal Name of Party to Contract:
CONTRACTOR: XXXXX

_____
By Signature

_____
Printed Name and Title

(Corporate Seal if applicable)

ATTEST: City of Mobile

_____
City Clerk

STATE OF ALABAMA
COUNTY OF MOBILE
Before me, the undersigned a Notary Public in and for said County and State, personally appeared _____ as _____ of _____ and after being duly sworn, did depose and say that he, as such officer and with full authority, signed the above and foregoing voluntarily as the act of said corporation on the day the same bears date.
Sworn to and subscribed for me this _____ day of _____, 20_____.

_____
NOTARY PUBLIC
My Commission Expires: _____

PERFORMANCE BOND

Any singular reference to Contractor, Surety, Owner or other Party shall be considered plural where applicable.

KNOW ALL MEN BY THESE PRESENTS: That the Contractor, _____, _____,_____, hereinafter called the Principal, and _____ _____, hereinafter called the Surety, are held and firmly bound unto the **City of Mobile, P. O. Box 1827, Mobile, AL 36633**, hereinafter called the Owner, in the penal sum of _____ and xx/100 Dollars ($_____.00) for payment of which we bind ourselves, our heirs, executors, administrators, successors, and assigns for the faithful performance of a certain written Contract dated the _____ day of _____, 2023 entered into between the Principal and the City of Mobile for furnishing all labor, material, equipment and insurance and performing all Work required to properly complete City of Mobile, Civic Center Cooling Tower Repalcement-Installation Labor, 401 Civic Center Drive, Mobile, Alabama, 36606, a copy of which said Contract is incorporated herein by reference and is made a part hereof as if fully copied herein.

NOW, THEREFORE, the condition of this obligation is such that if the Principal shall faithfully perform the terms and conditions of the Contract in all respects on its part and shall fully pay all obligations incurred in connection with the performance of such Contract on account of labor and materials used in connection therewith, and all such other obligations of every form, nature and character, and shall save harmless the Owner from all and any liability of every nature, kind and character which may be incurred in connection with the performance or fulfillment of such Contract or other such and liability resulting from negligence or otherwise on the part of such Principal and further save harmless the Owner from all cost and damage which may be suffered by reason of the failure to fully and completely perform said contract and shall fully reimburse and repay the Owner for all expenditures of every kind, character, and description which may be incurred by the Owner in making good any and every default which may exist on the part of the Principal in connection with the performance of said Contract; and further that the Principal shall pay all lawful claims of all persons, firms, partnerships, or corporations for all labor performed and material furnished in connection with the performance of the Contract, and that the failure to do so with such persons, firms, partnerships or corporations shall give them a direct obligation; and provided, however, that no suit, action, or proceedings by reason of any default whatever shall be brought on this bond after two years from the date on which the final payment on the Contract falls due, and provided, further, that if any alterations or additions which may be made under the Contract, or in the work to be done under it, or the giving by the Owner of any extensions of time for the performance of the Contract or any other forbearance being expressly waived. This obligation shall remain in full force and effect until the performance of all covenants, terms and conditions herein stipulated and after such performance, it shall become null and void.

In addition to any other legal mode of service, service of summons, and other process in civil actions brought in Mobile County may be had on the Contractor or the Surety on the bond by leaving a copy of the summons and complaint or other pleading or process with the Mayor of the City of Mobile which shall bind the principal Contractor and Surety to the mode of service above described and that the service shall be the same as personal service on the contractor or surety. This Bond is given pursuant to the terms of Alabama Code, Title 39-1-1, et. al., As Amended.

EXECUTED IN FOUR (4) COUNTERPARTS.

SIGNED, SEALED AND DELIVERED this ____ day of _____, 2023.

CONTRACTOR AS PRINCIPAL
Company: _____
(Corporate Seal)

By: _____
(Signature)
Name and Title: _____

SURETY
Company:_____
(Corporate Seal)

By: _____
(Signature)
Name and Title: _____

Resident Agent: _____
(Signature)
Name and Title: _____
Company Name:_____
Address: _____
_____
Phone and Fax: _____

Owner's Representative: Cassie Boatwright
REAM Director
PO Box 1827
Mobile, AL 36633
251-208-7454

LABOR AND MATERIAL PAYMENT BOND

Any singular reference to Contractor, Surety, Owner or other Party shall be considered plural where applicable.

KNOW ALL MEN BY THESE PRESENTS: That the Contractor**,** _____, _____, _____ , as Principal, and _____ _____, as Surety, are held and firmly bound unto the **City of Mobile, P. O. Box 1827, Mobile, AL 36633** (hereinafter called the "Obligee") in the penal sum of _____ and xx/100 ($_____.00) lawful money of the United States, for the payment of which sum well and truly to be made we bind ourselves, our heirs, personal representatives, successors, and assigns, jointly and severally, firmly by these presents.

WHEREAS, said Principal has entered into a certain Contract with said Obligee, dated the ____ day of _____, 2023 (hereinafter called the "Contract") for furnishing all labor, material, equipment and insurance and perform all work required to properly complete City of Mobile, Civic Center Cooling Tower Repalcement- Installation Labor, 401 Civic Center Drive, Mobile, Alabama, 36606, which**, THEREFORE, THE CONDITION OF THIS OBLIGATION IS SUCH** that if said Principal and all subcontractors to whom any portion of work provided for in said Contract is sublet and all assignees of said Principal and of such subcontractors shall promptly make payments to all persons supplying him or them with labor, materials or supplies for or in the prosecution of the work provided for in such Contract, or in any amendment or extension of or additions to said Contract, and for the payment of reasonable attorney's fees, incurred by the claimant or claimants in suits on each bond, then the above obligations shall be void; otherwise to remain in full force and effect. **PROVIDED,** however, that this bond is subject to the following conditions and limitations.

(a) Any person, firm or corporation that has furnished labor, materials or supplies for or in the prosecution of the work provided for in said contract shall have a direct right of action against the Principal and Surety on this bond, which right of action shall be asserted in a proceeding instituted in the County in which the work provided for in said Contract is to be performed or in any county in which said Principal and Surety does business. Such right of action shall be asserted in a proceeding instituted in the name of the claimant or claimants for his or their use and benefit against said Principal and Surety or either of them (but not later than one year after the final settlement of said Contract) in which action such claim or claims shall be adjudicated and judgment rendered thereon.

(b) The Principal and Surety hereby designate and appoint _____ **Attorney-In-Fact,** as the agent of each of them to receive and accept service of process or other pleading issued or filed in any proceeding instituted on this bond and hereby consent that such service shall be the same as personal service on the Principal and/or Surety. In addition to any other legal mode of service, service of summons, and other process in civil actions brought in Mobile County may be had on the Contractor or the Surety on the bond by leaving a copy of the summons and complaint or other pleading or process with the Mayor of the City of Mobile which shall bind the principal Contractor and Surety to the mode of service above described and that the service shall be the same as personal service on the contractor or surety.

(c) The Surety shall not be liable hereunder for damage or compensation recoverable under any Workmen's Compensation or Employer's Liability Statute.

(d) In no event shall the Surety be liable for a greater sum than the penalty of this bond, or subject to any suit, action or proceeding thereon that is instituted later than two years after the final settlement of said Contract.

(e) This bond is given pursuant to the terms of Alabama Code, Title 39-1-1, et. al., As Amended.

EXECUTED IN FOUR (4) COUNTERPARTS.

SIGNED, SEALED AND DELIVERED this ____ day of _____, 2023

CONTRACTOR AS PRINCIPAL
Company: _____
(Corporate Seal)

By: _____
(Signature)

Name and Title:
_____

SURETY
Company: _____
(Corporate Seal)

By: _____
(Signature)

Name and Title:_____

Resident Agent: _____
(Signature)

Name and Title: _____
Company Name: _____
Address: _____
_____
Phone and Fax: _____

Owner's Representative: Cassie Boatwright
REAM Director
PO Box 1827
Mobile, AL 36633
251-208-7454

Company ID Number:

Approved by:

Employer	
Name (Please Type or Print)	
Signature	Date
Department of Homeland Secu[illegible] Division	
Name (Please Type or P[illegible]	Title
Signature	Date

SAMPLE

E-Verify

Company ID Number:

Information Required for the E-Verify Program **Information relating to your Company:**	
Company Name	
Company Facility Address	
Company Alternate Address	
County or Parish	
Employer Identification Num	
North American Industry Classification Systems Code	
Parent Company	
Number of Employees	
Number of Sites Verified for	

SAMPLE

CITY OF MOBILE, AL
VENDOR INFORMATION FORM

Company Information:

1. City Vendor Number:

2. Name of Company:

3. Company D.B.A. Name, if any:

4. Mailing Address:

5. Remittance Address:

6. Telephone:

7. Fax

8. Main Email:

Primary Contact:

9. Contact Name and Title:

10. Contact Phone:

11. Contact Fax:

12. Contact Email:

Alternate Contact (if applicable):

13. Alt. Contact Name and Title:

14. Alt. Contact Phone:

15. Alt. Contact Fax:

16. Alt. Contact Email:

City of Mobile Business License Information:

17. City of Mobile Business License No. (if required):

Please attach additional sheets if necessary.

Form **W-9**
(Rev. December 2011)
Department of the Treasury
Internal Revenue Service

Request for Taxpayer Identification Number and Certification

Give Form to the requester. Do not send to the IRS.

Print or type
See Specific Instructions on page 2.

Name (as shown on your income tax return)

Business name/disregarded entity name, if different from above

Check appropriate box for federal tax classification:
☐ Individual/sole proprietor ☐ C Corporation ☐ S Corporation ☐ Partnership ☐ Trust/estate

☐ Limited liability company. Enter the tax classification (C=C corporation, S=S corporation, P=partnership) ►

☐ Other (see instructions) ►

☐ Exempt payee

Address (number, street, and apt. or suite no.)

Requester's name and address (optional)

City, state, and ZIP code

List account number(s) here (optional)

Part I Taxpayer Identification Number (TIN)

Enter your TIN in the appropriate box. The TIN provided must match the name given on the "Name" line to avoid backup withholding. For individuals, this is your social security number (SSN). However, for a resident alien, sole proprietor, or disregarded entity, see the Part I instructions on page 3. For other entities, it is your employer identification number (EIN). If you do not have a number, see *How to get a TIN* on page 3.

Note. If the account is in more than one name, see the chart on page 4 for guidelines on whose number to enter.

Social security number
☐☐☐ – ☐☐ – ☐☐☐☐

Employer identification number
☐☐ – ☐☐☐☐☐☐☐

Part II Certification

Under penalties of perjury, I certify that:

1. The number shown on this form is my correct taxpayer identification number (or I am waiting for a number to be issued to me), and
2. I am not subject to backup withholding because: (a) I am exempt from backup withholding, or (b) I have not been notified by the Internal Revenue Service (IRS) that I am subject to backup withholding as a result of a failure to report all interest or dividends, or (c) the IRS has notified me that I am no longer subject to backup withholding, and
3. I am a U.S. citizen or other U.S. person (defined below).

Certification instructions. You must cross out item 2 above if you have been notified by the IRS that you are currently subject to backup withholding because you have failed to report all interest and dividends on your tax return. For real estate transactions, item 2 does not apply. For mortgage interest paid, acquisition or abandonment of secured property, cancellation of debt, contributions to an individual retirement arrangement (IRA), and generally, payments other than interest and dividends, you are not required to sign the certification, but you must provide your correct TIN. See the instructions on page 4.

Sign Here Signature of U.S. person ► Date ►

General Instructions

Section references are to the Internal Revenue Code unless otherwise noted.

Purpose of Form

A person who is required to file an information return with the IRS must obtain your correct taxpayer identification number (TIN) to report, for example, income paid to you, real estate transactions, mortgage interest you paid, acquisition or abandonment of secured property, cancellation of debt, or contributions you made to an IRA.

Use Form W-9 only if you are a U.S. person (including a resident alien), to provide your correct TIN to the person requesting it (the requester) and, when applicable, to:

1. Certify that the TIN you are giving is correct (or you are waiting for a number to be issued),
2. Certify that you are not subject to backup withholding, or
3. Claim exemption from backup withholding if you are a U.S. exempt payee. If applicable, you are also certifying that as a U.S. person, your allocable share of any partnership income from a U.S. trade or business is not subject to the withholding tax on foreign partners' share of effectively connected income.

Note. If a requester gives you a form other than Form W-9 to request your TIN, you must use the requester's form if it is substantially similar to this Form W-9.

Definition of a U.S. person. For federal tax purposes, you are considered a U.S. person if you are:

- An individual who is a U.S. citizen or U.S. resident alien,
- A partnership, corporation, company, or association created or organized in the United States or under the laws of the United States,
- An estate (other than a foreign estate), or
- A domestic trust (as defined in Regulations section 301.7701-7).

Special rules for partnerships. Partnerships that conduct a trade or business in the United States are generally required to pay a withholding tax on any foreign partners' share of income from such business. Further, in certain cases where a Form W-9 has not been received, a partnership is required to presume that a partner is a foreign person, and pay the withholding tax. Therefore, if you are a U.S. person that is a partner in a partnership conducting a trade or business in the United States, provide Form W-9 to the partnership to establish your U.S. status and avoid withholding on your share of partnership income.

OFFICE OF SUPPLIER DIVERSITY

CITY OF MOBILE

Subcontracting and Major Supplier Plan

Contact Office of Supplier Diversity for questions on completing this form.
Via emai:Archnique.kidd@cityofmobile.org
251.208.7967
205 Government Street, 4th Floor

Bidders and Proposers – Please complete and submit these forms as required by your City of Mobile Bid or Proposal Specification.

This document provides information to the City of Mobile about the subcontractors and major suppliers you intend to use to complete this contract. Failure to submit this form, when so required by the bid or proposal specification, will render your bid non-responsible. Not all specifications require this form to be completed, or may require its completion under varying circumstances. Refer to the specification for direction.

The City of Mobile will use this form to:

- Understand your intended use of subcontractors and major suppliers as part of your bid/proposal submission.
- Evaluate your capability to complete the performance of this contract.
- Determine your use of Disadvantaged Business Enterprises (DBEs) as subcontractors and suppliers.
- For certain contracts, assess whether you exercised "good faith efforts" to use DBE subcontractors and suppliers for at least 15% of the value of your bid/proposal amount. (See City of Mobile City Code Sec. 14-2.)

Include this form with your bid/proposal submission. Should your bid be considered the lowest responsible bid, you will have the opportunity to update this form at contract signature. You also will be required to re-verify your information at contract conclusion.

The bid specification may require you to attempt in "good faith" to use DBE subcontractors and suppliers for at least 15% of the value of your bid in the performance of this contract. If you don't have that level of DBE subcontractor / supplier usage (as documented on **Form 1)**, you are required to complete the "good faith effort" documentation on **Form 2**. When so required, failure to adequately address the good faith effort factors on **Form 2** will render your bid or proposal as non-responsive. The determination whether the bid or proposal adequately demonstrates and documents a DBE subcontractor/supplier plan, or good faith efforts to complete such a plan, will be at the sole discretion of the City of Mobile. You are encouraged to work with the City of Mobile Supplier Diversity Manager when preparing this form.

About **"DBEs"**: The City of Mobile considers businesses owned by minorities, women, or disabled veterans to be DBEs. Please consult with the City Supplier Diversity Manager for clarification or lists of certified DBEs.

About **"Good Faith" Effort**: The City of Mobile expects contractors holding large contracts to recruit and engage DBEs to be a part of their team. If the specification sets, and you cannot meet, the 15% target, you must show us how you attempted to recruit and engage DBEs to meet this target. This helps the City identify DBE market weaknesses for development, and ensures all bidders are equally considering this obligation in preparing a bid. The "good faith effort" factors on **Form 2** are not intended to be a mandatory, exhaustive, or exclusive. They are a tool to help you, and to help the City consistently and fairly consider your effort.

Contact Office of Supplier Diversity for questions on completing this form.
Via emai:Archnique.kidd@cityofmobile.org
251.208.7967
205 Government Street, 4th Floor

FORM 1: Background and Plan

Section I. Information about your company

Company	
Address	
Telephone	
E-Mail	

RFP/RFQ Solicitation Number	
Project Description	
Is your company a DBE company?	Yes ☐ No ☐
Work force demographics	Male _____ Female _____ Minority _____ Non-minority _____ Vets _____ Total #of Employees _____

Subcontractor/Major Supplier Plan submitted by:

Printed Name: _____

Signature: _____Date: _____

Title: _____

The following employee will be designated as the **DBE Liaison** for all communication regarding DBE participation including documentation for DBE participation and maintenance of records of Good Faith Efforts for this contract award:

Name: _____Title: _____

E-mail:_ Phone: _____

Contact Office of Supplier Diversity for questions on completing this form.
Via emai:Archnique.kidd@cityofmobile.org
251.208.7967
205 Government Street, 4th Floor

FORM 1: Background and Plan

Section II. Plan for Subcontractors and Major Vendors

This form asks for your intentions to utilize subcontractors and suppliers as a potential contractor for the city of Mobile. For purposes of this form, disadvantaged individuals or enterprises include persons or small-business-enterprise owners who are women, members of a racial minority, or disabled military veterans.

RFP/RFQ/Bid # _____ Your Bid/Proposal Amount $_____ Date: _____/ _____/____

Description_____

Name of Bidder/Proposer: _____

I intend to use the following subcontractors: (Attach additional pages if necessary)

Subcontractor or Major Supplier	Phone	Scope of Work to be performed	$$ Value to be Performed	% Of Your Bid Amount	DBE?	Official Verification Only

Form 2: Good Faith Effort Documentation

Name of Bidder: _____

Contact Person: _____ Phone_____ Email_____

Please complete this form if you are unable to identify DBE subcontractors or suppliers to reach 15% of the value of your bid.

YES (☐)	NO (☐)	**Did you do these suggested areas for DBE recruitment and engagement**
		PRE-BID MEETING(S): The bidder attended all pre-bid meetings scheduled by the City to inform DBEs of contracting and subcontracting opportunities.
		CMDBE/ALDOT DBE LIST(S): The bidder utilized the Office of Supplier Diversity's list or lists of certified ALDOT DBE 's
		SMALL CONTRACT(S): The bidder selected specific portions of the work to be performed by DBEs in order to increase the likelihood of meeting the DBE goals (including breaking down contracts into smaller units to facilitate DBE participation). Consider support services, including insurance, accounting, temporary labor, and transportation, landscaping, and janitorial as potential areas for DBE use.
		FOLLOW-UP: The bidder followed-up initial indications of interest by DBEs by contacting those DBEs to determine with certainty if they remained interested in bidding.
		ADVERTISEMENT: The bidder advertised in general circulation and/or trade association publications concerning subcontracting opportunities, and allowed DBEs reasonable time to respond.
		INTERNET ADVERTISING: The bidder advertised DBE and/or subcontracting opportunities on the *City of Mobile* Facebook page or other internet portals that are accessible to DBEs and/or potential subcontractors.
		GOOD FAITH NEGOTIATIONS: The bidder negotiated in good faith with interested DBEs and did not reject DBEs as unqualified without sound business reasons based on a thorough investigation of their capabilities.

		INFORMATION: The bidder provided interested DBEs with adequate information about the plans, specifications and requirements of the subcontract.
		WRITTEN NOTICE(S): The bidder/proposer took the necessary steps to provide written notice in a manner reasonably calculated to inform DBEs of subcontracting opportunities and allowed sufficient time for them to participate effectively.
		COMMUNITY RESOURCES: The bidder/proposer used the services of available community organizations, small and/or disadvantaged business assistance offices and other organizations that provided assistance in the recruitment and placement of DBE firms.
		CONTRACT RECORDS: The bidder/proposer has maintained the following records for each DBE that has bid on the subcontracting opportunity: 1. Name, address, and telephone number; 2. A description of information provided by the bidder/proposer or subcontractor; and 3. A statement of whether an agreement was reached, and if not, why not, including any reasons for concluding that the DBE was unqualified to perform the job.

Please indicate if any of the following applied:

_____ There are not ways to break out 15% of the value of this contract for subcontractors / suppliers.

_____ Could not find sufficient DBEs to provide subcontracting or supplier services.

_____ DBEs were available but did not have sufficient qualifications or experience to meet the needs of this contract.

Please indicate additional efforts you have taken to recruit and engage DBEs. _____

_____

_____

Suggestions or comments to improve this program. _____

_____

SECTION 01010
SUMMARY OF THE WORK

PART 1 GENERAL

1.1 SECTION INCLUDES

A. Summary of Work: Contract, contractor use of premises.

B. Contract Considerations: Schedule of values, applications for payment and change procedures

C. Coordination and Meetings: Coordination, field engineering, cutting and patching, meetings, progress meetings, examination, preparation.

D. Submittals: Construction progress schedules, proposed products list and manufacturers' installation instructions

E. Quality Control: Quality assurance - control of installation, Tolerances and References

F. Construction Facilities and Temporary Controls: Electricity, temporary ventilation, water service, barriers and fencing, protection of installed work, security, parking, progress cleaning and waste removal.

G. Material and Equipment: Products, transportation, handling, storage, and protection, products options, substitutions.

H. Contract Closeout: Contract closeout procedures, final cleaning, adjusting, project record documents, operation and maintenance data, spare parts and maintenance materials, warranties.

1.2 CONTRACT

A. Summary of Work:
Base Bid: The scope of this project is to remove the existing Cooling Tower #1 and install, per manufacturers' instructions , one (1) Evapco, AT-29-4K21 Cooing Tower, as provided by the City of Mobile.

B. Contract Description: Stipulated sum.

1.3 CONTRACTOR USE OF PREMISES

A. Limit use of premises to allow continued Owner occupancy. This is an active building. The work is to be scheduled and completed to incur minimal downtime. The contractor will be given Five (5) calendar days to complete the Work in

accordance with the Contract Documents. All facilities shall remain in use except the immediate work area for this project. Obey all Facility Regulations and coordinate access and schedule of work with Project Manager.

1.4 SCHEDULE OF VALUES

A. Submit Schedule of Values within five (5) calendar days of notification of project award.

1.5 APPLICATIONS FOR PAYMENT

A. Payment Period: Upon 90% completion and commissioning, except for final payment of retainage after all Close Out documents are submitted and approved.

1.6 CHANGE ORDER PROCEDURES

A. All contract changes involving a change in scope, payment and/or time shall be made by change order.

B. Stipulated Sum/Price Change Order: Based on Proposal Request and Contractor's fixed price quotation or Contractor's request for a Change Order as approved by Owner.

1.7 ALTERNATE BID ITEMS

A. Not applicable.

1.8 COORDINATION

A. Coordinate scheduling, submittals, and Work at the facility to ensure an efficient and orderly sequence and to facilitate the continued uninterrupted use of the Facility.

1.9 FIELD ENGINEERING

A. Establish elevations, lines, and levels and certify that elevations and locations of the Work conform to the Contract Documents. Verify existing conditions.

B. Contractor shall field verify all measurements and quantities required for a complete installation.

1.10 PRECONSTRUCTION MEETINGS

A. Owner will schedule a pre-construction meeting after contract award for all affected parties.

1.11 PROGRESS MEETINGS

A. Schedule and administer meetings throughout progress of the Work at pre-approved intervals.

1.12 CONSTRUCTION PROGRESS SCHEDULES

A. Submit initial progress schedule in duplicate within five (5) calendar days after date of notice of award of project for Project Manager's review.

1.13 QUALITY ASSURANCE - CONTROL OF INSTALLATION

A. Monitor quality control over suppliers, products, services, and workmanship, to produce Work of specified quality.

B. Comply with manufacturers' installation instructions.

C. Comply with specified standards as minimum quality for the Work except when more stringent tolerances, codes, or specified requirements indicate higher standards or more precise workmanship.

D. Supply certification from manufacturer that the installed Work meets or exceeds all manufacturers' requirements.

1.14 EXAMINATION

A. Verify that existing site conditions and subsurfaces are acceptable for subsequent Work. Beginning new Work means acceptance of existing conditions.

B. Verify that utility services are available, of the correct characteristics, and in the correct location.

1.15 PREPARATION

A. Demolish and remove the existing Cooling Tower and pressure existing connections.

1.16 TOLERANCES

A. Monitor fabrication and installation tolerance control of installed Products over suppliers, manufacturers, Products, site conditions, and workmanship, to produce acceptable Work. Do not permit tolerances to accumulate. Comply fully with manufacturers' tolerances.

1.17 REFERENCES

A. Conform to reference standards by date of issue current as of date of Contract Documents.

B. Should specified reference standard conflict with Contract Documents, request clarification from Project Manager before proceeding.

1.18 ELECTRICITY

A. Unless otherwise provided for, Contractor shall be allowed to utilize power from the facility in moderate amounts.

B. Provide power outlets for construction operations, branch wiring, distribution boxes, and flexible power cords as required.

1.19 WATER SERVICE

A. Owner shall provide suitable potable water in moderate quantities without cost to the Contractor.

1.20 BARRIERS AND FENCING

A. Provide barriers and fencing as needed to prevent unauthorized entry to construction areas and to protect existing facilities and adjacent properties from dust, debris and damage.

1.21 PROTECTION OF INSTALLED WORK

A. Protect installed Work and provide special protection where specified in individual specification sections. Prohibit traffic or storage upon grass or paving surfaces.

1.22 ACCESS ROADS & HAULING

A. Maintain access routes through the public thoroughfare and parking areas to serve the construction area as required without obstructing traffic or blocking access for facility staff or participants.

B. Restore site to pre-construction condition. Fill ruts, replace broken or damaged amenities, sod disturbed areas.

1.23 PARKING

A. The Owner shall arrange for temporary parking areas to accommodate construction personnel on site. Contractor and sub-contractor vehicles shall park only in areas designated by the Owner. Do not block traffic.

1.24 PROGRESS CLEANING AND WASTE REMOVAL

A. Collect and maintain work areas free of waste materials, debris, and rubbish on a daily basis. Maintain site in a clean and orderly condition. Provide refuse containers and dispose of construction debris legally off site. The Owner may request load tickets from landfills permitted to accept construction debris.

1.25 REMOVAL OF UTILITIES, FACILITIES, AND CONTROLS

A. Remove temporary utilities, equipment, facilities and materials, prior to Substantial Completion review.

B. Clean and repair damage caused by installation or use of temporary work.

C. Restore existing facilities used during construction to original condition. Restore permanent facilities used during construction to specified condition.

1.26 TRANSPORTATION, HANDLING, STORAGE AND PROTECTION

A. Transport, handle, store, and protect Products in accordance with manufacturers' instructions.

1.27 FINAL CLEANING

A. Execute final cleaning prior to final inspection of work area. User may occupy portions of the work incrementally as the work is completed and accepted. Entire project to be ready for use by User once all areas of work are completed.

B. Clean debris from site and drainage systems.

C. Remove waste and surplus materials, rubbish, and construction facilities from the facility and the site. Leave site in raked and smooth condition.

1.28 PROJECT RECORD DOCUMENTS

A. Maintain on site one set of Contract Documents to be utilized only for record documents.

B. Record actual revisions to the Work. Record information concurrent with construction progress.

C. Specifications: Legibly mark and record at each Product section a description of actual Products installed.

D. Record Documents and Shop Drawings: Legibly mark each item to record actual construction.

E. Submit documents to Project Manager with claim for final Application for Payment.

1.29 WARRANTIES

A. Contractor shall provide one (1) year parts and labor warranty for all equipment and materials furnished and installed for this Project. Warranty period shall start upn substantial completion. Contractor shall promptly repair all deficiencies within the warranty timeframe. Warranty shall be furnished in writing to owner on contractor's letterhead upon completion of the Project.

PART 2 PRODUCTS
City Provided – Evapco Cooling Tower – AT 29-4K21

PART 3 EXECUTION
Not Used.

END OF SECTION

SECTION 01 21 00

ALLOWANCES

PART 1 - GENERAL

1.1 RELATED DOCUMENTS

Drawings and general provisions of the Contract, including General Conditions and Division 01 Specification Sections, apply to this Section.

1.2 SUMMARY

A. Allowances will be utilized to:

1. Defer selection of certain items until more information is available.

2. Provide for discretionary installation of materials where exact and specific conditions cannot be determined in advance.

3. Provide for the discretionary use of labor where tasks and time frames cannot be determined in advance.

B. Include in Total Bid a stipulated lump sum allowance amount as specified in this Section.

1.3 ALLOWANCE

A. Include in the Total Base Bid a stipulated allowance(s) as indicated on the Bid Form for the use upon Owner's instruction. Upon Contractor inspection and Owner approval, any additional work that may be required, but not covered in the original Scope of Work (Base Scope Bid), shall be added to the scope and cost charged against the Contingency Allowance. Contractor's cost for products, delivery, installation labor, insurance, payroll, bonding, equipment rental and overhead and profit will be included in the Allowances. Contractor's markups on allowances are limited to 10% for subcontractor's work and 15% for his own forces.

B. Use of Contingency Allowance(s) shall be approved in writing by the Owner before any materials are ordered or work performed.

C. Upon completion of the Work, any unused portion of the Allowances shall be credited back to the City of Mobile in the form of a Change Order.

D. Contractor shall provide a detailed proposal of the work with overhead and profit broken out. Such proposals shall include proposals from subcontractors, also showing their detailed proposal with overhead and profit broken out.

1.4 SELECTION AND PURCHASE

A. Advise the Project Manager when final selection and purchase of allowance item must be complete to avoid delay.

1.5 SUBMITTALS

A. Request for Use of Allowance: Submit proposals for approval that detail and break out costs for contractors and subcontractor's markups.

B. After Use of Allowance: Submit invoices to show quantity delivered to the site for each allowance.

PART 2 - PRODUCTS

Not used

PART 3 - EXECUTION

3.1 INSPECTION

A. Promptly inspect all Allowance items upon delivery. Immediately report any shortage, damage, or defects to Project Manager.

3.2 PREPARATION

A. Coordinate materials and installation to assure that each item is integrated with related construction activities.

3.3 ALLOWANCE SCHEDULE

A. Include as a Contingency Allowance the lump sum amount of Five Thousand and xx/100 Dollars ($5,000.00).

END OF SECTION

GENERAL NOTES:

1. DEMOLITION NOTE: CONTRACTOR SHALL NOT START ANY DEMOLITION WORK THAT REQUIRES SHUT-DOWN OF THE EXISTING CHILLERS, PUMPS, CT-3, OR RELATED ITEMS UNTIL THE NEW CT-1 AND RELATED ITEMS HAVE BEEN COMPLETED AS MUCH AS POSSIBLE WITHOUT REQUIRING ANY SHUT-DOWN. THE EXISTING TOWERS CT-1 AND CT-2 ARE NOT IN USE AND CAN BE REMOVED AS SOON AS CONTRACTOR VERIFIES THAT THE EXISTING CR VALVES FOR CT-1 AND CT-2 ARE CLOSED AND POWER IS OFF AT THE CORRESPONDING CT-1 AND CT-2 MCC MOTOR STARTERS AND DSW'S SERVING THEM. AFTER CLOSING THE CR VALVES AND TURNING POWER OFF TO THE EXISTING CT-1 AND CT-2, THOSE TOWERS CAN BE REMOVED AS WELL AS ANY PIPING OR ACCESSORIES NOT IMPACTING THE OPERATION OF THE EXISTING CHILLERS, PUMPS, CT-3, OR RELATED ITEMS.
2. NEW WORK NOTE: CONTRACTOR SHALL NOT START ANY NEW WORK THAT REQUIRES SHUT-DOWN OF THE EXISTING CHILLERS, PUMPS, CT-3, OR RELATED ITEMS UNTIL THE NEW CT-1 AND RELATED ITEMS HAVE BEEN COMPLETED AS MUCH AS POSSIBLE WITHOUT REQUIRING ANY SHUT-DOWN. PRIOR SHUT-DOWN, THE FOLLOWING ITEMS SHALL BE PROVIDED:

   ALL EXISTING CONDITIONS ARE VERIFIED INCLUDING SHUT-DOWN PROCEDURES, PIPE SIZES, LOCATIONS, AND ROUTING. VERIFY CONNECTION SIZES ON ALL EQUIPMENT INLETS AND OUTLETS.

   COORDINATE WITH OTHER TRADES, THE PROJECT MANAGER AND THE NEW COOLING TOWER (CT-1) ARRIVAL DATE AND BE PREPARED TO EXPEDITE THE CT-1 INSTALLATION UPON ARRIVAL.

   CONTRACTOR SHALL SUBMIT, OBTAIN APPROVAL, ORDER AND HAVE ALL NEW EQUIPMENT, MATERIALS, PARTS, AND ACCESSORIES REQUIRED BEFORE THE NEW COOLING TOWER ARRIVES AT THE JOBSITE. CONTRACTOR SHALL HAVE A CRANE AT THE JOBSITE UPON ARRIVAL OF THE COOLING TOWER AND START WORK IMMEDIATELY.

   ARRIVAL OF THE NEW COOLING TOWER.
3. CONTRACTOR SHALL VERIFY CLEARANCE SPACE AVAILABLE, OFFSETS REQUIRED AND WORK BY OTHER TRADES PRIOR TO ORDERING MATERIALS OR EQUIPMENT. COORDINATE PIPE ROUTING AND SUPPORT WITH EXISTING TRUSSES, PIPING AND EQUIPMENT. PROVIDE AND INSTALL SUPPORT AND REINFORCEMENTS AS REQUIRED TO SUPPORT PIPING. ADJUST PIPE ROUTING AND EQUIPMENT INSTALLATIONS AS REQUIRED.
4. CONTRACTOR SHALL INSTALL ALL EQUIPMENT, PIPING AND ACCESSORIES SUCH THAT MANUFACTURER'S RECOMMENDED CLEARANCES ARE MET FOR ACCESS TO MOTORS, FANS, COMPRESSORS, CONTROLS, ETC.
5. ALL CR AND CS PIPING AND FITTINGS SHALL BE SCHEDULE 40 BLACK STEEL. ALL PIPING, FITTINGS, SUPPORTS AND ACCESSORIES SHALL BE PAINTED WITH 2 COATS OF WHITE RUSTOLEUM PAINT. REFER TO PIPE SUPPORT DETAIL THIS SHEET. ALL CR AND CS PIPING SHALL BE PROVIDED AND SECURELY INSTALLED PER NOTES, CODES AND MANUFACTURER'S INSTRUCTIONS. INSTALLED FOR 125 PSIG WORKING PRESSURE. WELDED OR VICTAULIC CONNECTIONS ARE ALLOWED AT CONTRACTOR'S OPTION. INSTALL BUTTERFLY TYPE ISOLATION VALVES WHERE SHOWN AND REQUIRED FOR ISOLATION. USE LONG RADIUS ELBOWS UNLESS SHORT RADIUS ELBOWS ARE SPECIFICALLY APPROVED DUE TO SPACE LIMITATIONS.
6. CONTRACTOR SHALL PROVIDE ONE (1) YEAR PARTS AND LABOR WARRANTY FOR ALL EQUIPMENT AND MATERIALS FURNISHED AND INSTALLED FOR THIS PROJECT. WARRANTY PERIOD SHALL START UPON SUBSTANTIAL COMPLETION. CONTRACTOR SHALL PROMPTLY REPAIR ALL DEFICIENCIES WITHIN THE WARRANTY TIMEFRAME. WARRANTY SHALL BE FURNISHED IN WRITING TO OWNER ON CONTRACTOR'S LETTERHEAD UPON COMPLETION OF THE PROJECT.
7. CONTRACTOR SHALL REPAIR OR REPLACE ANY DAMAGED ITEMS DURING WORK. REPAIRS OR REPLACEMENTS SHALL BE APPROVED BY ENGINEER AND OWNER.
8. COORDINATE ACCESS TO AREAS OF WORK AND PROJECT SCHEDULE WITH DIRECTOR OF FACILITY MAINTENANCE, GREGG BLAIZE. PHONE (251) 461-1890.
9. INSTALL ALL MATERIALS CAREFULLY SECURELY IN ACCORDANCE WITH APPLICABLE CODE REQUIREMENTS AND MANUFACTURER'S INSTRUCTIONS.
10. ALL EQUIPMENT, LABOR AND MATERIALS SHALL BE ACCEPTABLE TO OWNER AND ENGINEER.
11. SECURELY MOUNT AND INSTALL ALL EQUIPMENT AND MATERIALS. PROVIDE REINFORCEMENTS AS REQUIRED.
12. CONTRACTOR SHALL FOLLOW PROJECT SCHEDULE AS APPROVED AND INDICATED BY PROJECT MANAGER.
13. COORDINATE EXACT ROUTING WITH EXISTING CONDITIONS AND NEW WORK. PROVIDE OFFSETS, TRANSITIONS AND ADJUST PIPE ROUTING AS REQUIRED.
14. ALL PIPING AND EQUIPMENT SYSTEMS SHALL NOT HAVE UNACCEPTABLE LEVELS OF NOISE AND VIBRATION. MAKE ANY ADJUSTMENTS OR CORRECTIONS NECESSARY TO RESOLVE ANY NOISE AND VIBRATION PROBLEMS TO SATISFY THE PROJECT MANAGER AND ENGINEER AND AT NO ADDITIONAL COSTS.
15. ALL WORK AREAS SHALL BE REGULARLY CLEANED FROM DEBRIS AND WASTE MATERIALS. PROPERLY AND SAFELY DISPOSE OF ALL REMOVED EQUIPMENT AND MATERIALS. JOBSITE SHALL BE LEFT IN CLEAN AND ACCEPTABLE CONDITION PRIOR TO FINAL ACCEPTANCE OF WORK.
16. CONTRACTOR SHALL PROVIDE A COMPLETE AND AND NEATLY ORGANIZED PDF SET OF SUBMITTALS FOR ALL EQUIPMENT AND MATERIALS BEING PROVIDED. SUBMITTALS SHALL HAVE A COVER SHEET AND INDEX OF ITEMS SUBMITTED. SUPPLIERS, CONTRACTOR AND SUBS SHALL CAREFULLY REVIEW SUBMITTALS BEFORE ISSUE FOR REVIEW. EMAIL SUBMITTAL TO PROJECT MANAGER AND ENGINEER. CLEARLY MARK SUBMITTALS WITH TAGGING, DIMENSIONS, PERFORMANCE, ACCESSORIES, ETC. CONTRACTOR SHALL SUBMIT ALL EQUIPMENT, MATERIALS AND TEST & BALANCE CONTRACTOR QUALIFICATIONS.
17. CLEAN ALL EXISTING AND NEW STRAINERS AT START-UP AND BEFORE TEST AND BALANCE. RECLEAN STRAINERS AFTER 24 HOURS AND AFTER 2 WEEKS OF OPERATION.
18. COORDINATE ENTIRE INSTALLATION WITH EQUIPMENT PROVIDED, OTHER TRADES AND WITH EXISTING CONDITIONS. MAKE NECESSARY ADJUSTMENTS TO PREVENT CONFLICTS AT NO ADDITIONAL COSTS.
19. CONTROLS ARE NOT INCLUDED IN THE SCOPE OF WORK FOR THIS PROJECT.
20. ALL ELECTRICAL LABOR AND MATERIALS FOR 120V/1ø POWER SUPPLIES AND ABOVE SHALL BE BY LICENSED ELECTRICIAN IN THE STATE OF ALABAMA WITH ALL WORK PER PLAN AND NEC REQUIREMENTS. ALL POWER WIRING SHALL BE IN SECURELY INSTALLED RIGID GALVANIZED CONDUIT. CONTRACTOR SHALL PROVIDE ALL POWER RELATED WORK PER NEC REQUIREMENTS AND FURNISH CONDUIT, WIRING AND ACCESSORIES TO MEET THE NEEDS OF THE PROJECT FOR CONNECTION AND OPERATION OF THE NEW COOLING TOWER.
21. TEST AND BALANCE SHALL BE ACCURATELY PROVIDED BY CERTIFIED T&B COMPANY AND BALANCED PER AABC OR NEBB REQUIREMENTS. T&B CONTRACTOR SHALL BE AABC OR NEBB CERTIFIED. PROVIDE COMPLETE AND CORRECT PDF TEST & BALANCE REPORTS FOR ENGINEER'S RECORDS AND OWNER RECORDS.
22. CONTRACTOR SHALL PROVIDE A FINAL SET OF AS-BUILT DRAWINGS UPON PROJECT CLOSE-OUT. REGULARLY MARK-UP ANY VARIATIONS FROM EXISTING CONDITIONS OR CHANGES MADE AS WORK PROGRESSES.
23. ANY CONTROLS REQUIRED SHALL BE UNDER A SEPARATE CONTRACT AND ARE NOT PART OF THIS CONTRACT.

VICINITY MAP

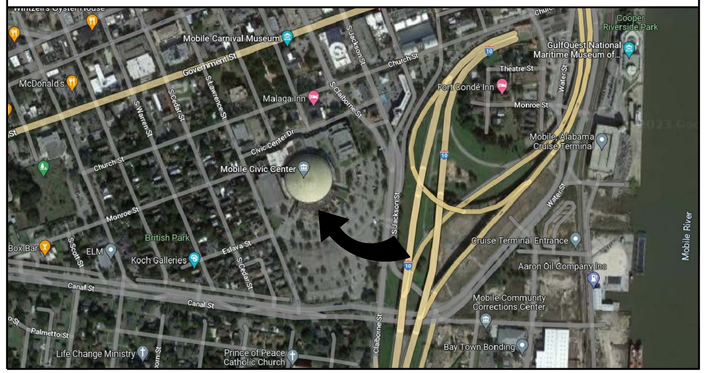

DRAWING SET INDEX

M-1	SCHEDULE, DETAIL, GENERAL NOTES, LEGEND AND PROJECT VICINITY MAP
M-2	DEMOLITION PLAN, NEW WORK PLAN AND KEYNOTES

COOLING TOWER SCHEDULE

MARK	TYPE	CAPACITY				COOLING TOWER SHIPPING WEIGHT AND DIMENSIONS				ELECTRICAL DATA					COOLING TOWER ORDERED BY THE CITY OF MOBILE
		GPM	E.W.T. (°F)	L.W.T. (°F)	EWB (°F)	WEIGHT	LENGTH	WIDTH	HEIGHT	MOTORS	VOLTS	Hz	PHASE	FLA PER MOTOR	
CT-1	INDUCED DRAFT – COUNTERFLOW	1,500	95°F	85°F	80°F	10,970 lbs	21'-0"	8'-5"	14'-1"	2 @ 20 HP	460	60	3	24.1 AMPS	EVAPCO MODEL AT 29-4K21L

NOTES:
1. COOLING TOWER PERFORMANCE IS FOR FULL SPEED OPERATION WITH BOTH TOWER FANS OPERATING.
2. COOLING TOWER SHALL HAVE AN EXTERNAL WITH A LADDER AND A LADDER EXTENSION FOR SERVICING EACH MOTOR. LADDERS AND EXTENSIONS SHALL BE FIELD INSTALLED BY CONTRACTOR.
3. COOLING TOWER SHALL BE INDUCED DRAFT, VERTICAL DISCHARGE COUNTERFLOW COOLING TOWER WITH VANE AXIAL ALUMINUM FANS, BELT FAN DRIVES, PVC AIR INLET LOUVERS, FILL, DRIFT ELIMINATORS AND WATER DISTRIBUTION SYSTEM, HOT DIPPED GALVANIZED CASING, STRUCTURE AND BASIN FOR LOWEST COST OPTION AS REQUESTED.
4. POWER SUPPLY TO EACH FAN MOTOR SHALL BE INDEPENDENT. POWER WIRING TO EACH MOTOR SHALL BE BY CONTRACTOR. REFER TO PLANS AND NOTES.
5. COOLING TOWER SHALL HAVE AN OVERSIZED BOTTOM OUTLET TO EXISTING SUMP.

MECHANICAL LEGEND

AFF	ABOVE FINISHED FLOOR
CH	CHILLER
CP	CONDENSER WATER PUMP
CR	CONDENSER WATER RETURN
CS	CONDENSER WATER SUPPLY
CT	COOLING TOWER
CWP	CHILLED WATER PUMP
DSW	DISCONNECT SWITCH
(E)	EXISTING
GPM	GALLONS PER MINUTE
TS	TEMPERATURE SENSOR
TYP.	TYPICAL
	CONNECTION FROM NEW TO EXISTING

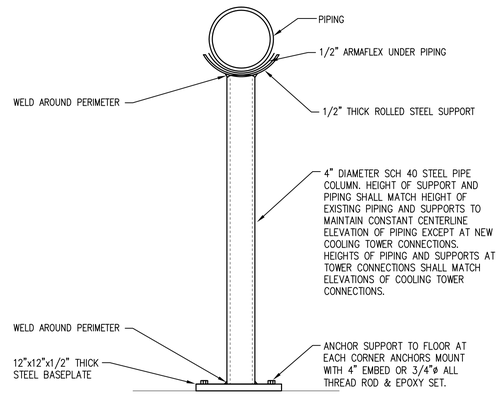

NOTE: CONTRACTOR SHALL PROVIDE AND INSTALL PIPE COLUMN SUPPORTS FOR ALL NEW CONDENSER PIPING. THE PIPING SUPPORTS SHALL BE WITHIN 12" OF EACH 90ø ELBOW AND AT A MAXIMUM OF 8'-0" ON CENTERS BELOW NEW PIPING. COORDINATE EXACT LOCATIONS WITH EXISTING CONDITIONS AND NEW WORK FOR SECURE SUPPORT OF PIPING AND MAINTAIN CLEARANCES FOR ACCESS AND MAINTENANCE FOR EQUIPMENT. PAINT ALL NEW PIPING, FITTINGS, BASEPLATES AND SUPPORTS WITH TWO COATS OF WHITE RUSTOLEUM PAINT.

PIPE COLUMN DETAIL

NOT TO SCALE

Lewis Engineering & Associates, Inc.
1621 S. University Blvd. Suite A-3 Mobile, AL 36609
Phone: (251) 660-9221 Cell: (251) 751-7466
kenny@lewisengineering.com

Cooling Tower Replacement
City of Mobile Project CC-031-23
Mobile Civic Center
Mobile, Alabama

ALABAMA REGISTERED NO. 19097 PROFESSIONAL ENGINEER KENNETH L. LEWIS 4-17-23

Sheet Title:
SCHEDULE, DETAIL, GENERAL NOTES, LEGEND AND PROJECT VICINITY MAP
PERMIT ISSUE

Project Number: L2301
Date: 4/17/23
Drawn By: SPB
Checked By: KLL

Sheet No.
M-1

PROPOSED CRANE LOCATION IS IN PARKING LOT SOUTH OF AREA OF WORK. (15)

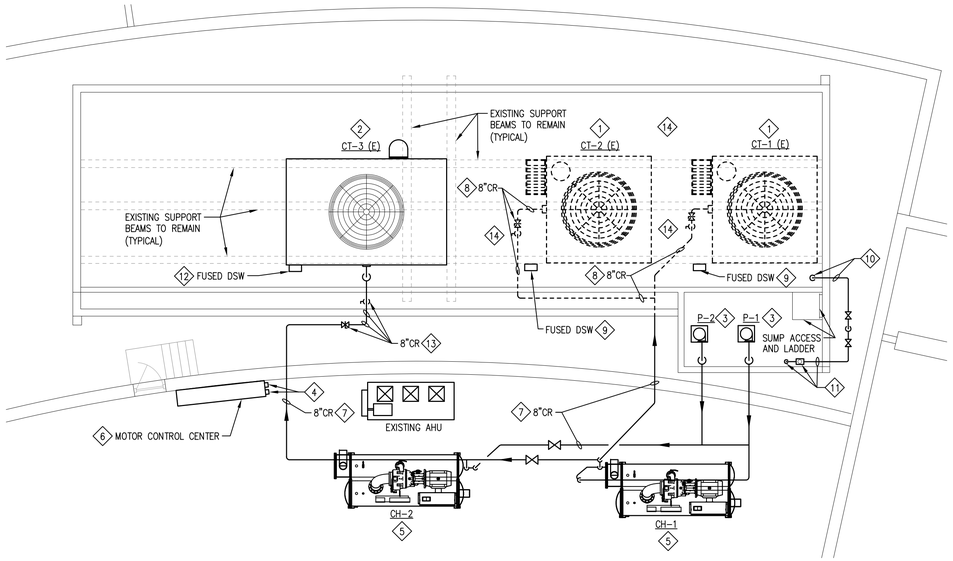

DEMOLITION PLAN

SCALE: 1/8" = 1'-0"

PROPOSED CRANE LOCATION IS IN PARKING LOT SOUTH OF AREA OF WORK. (18)

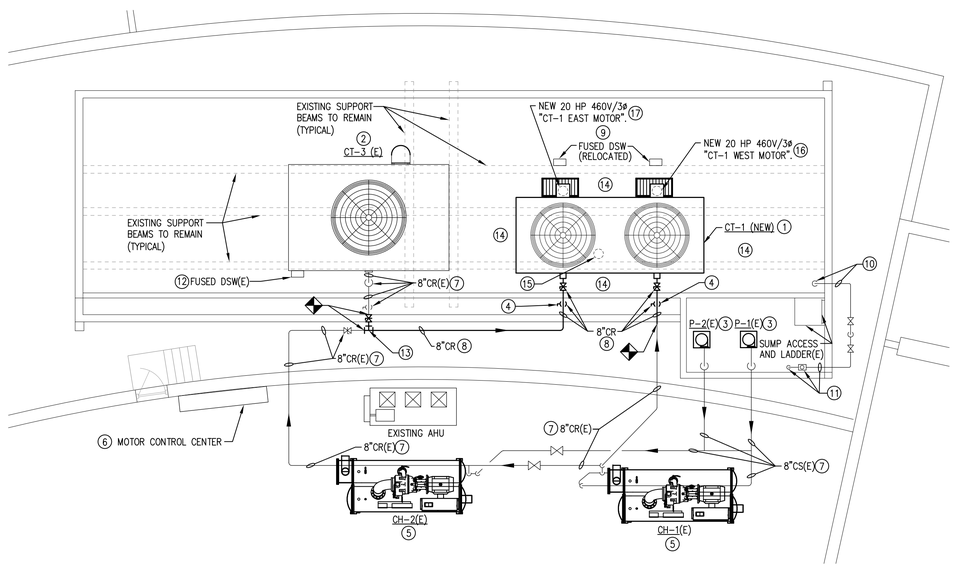

NEW WORK PLAN

SCALE: 1/8" = 1'-0"

DEMOLITION KEYNOTES

1. PRIOR TO ARRIVAL OF NEW COOLING TOWER, SHUT-DOWN POWER AT EXISTING COOLING TOWER (CT) AND REMOVE EXISTING POWER FEEDER. CLOSE CONDENSER RETURN (CR) VALVE TO PREVENT FLOW TO EXISTING CT AND REMOVE CR PIPING FROM CT TO OUTLET OF VALVE. REMOVE EXISTING CT AND ACCESSORIES. RECYCLE REMOVED ITEMS WHERE POSSIBLE AND PROPERLY DISPOSE OF REST. PREPARE FOR INSTALLATION OF NEW CT TO EXPEDITE REPLACEMENT WITH MINIMAL TIME FOR SHUT-DOWN AND CRANE.
2. EXISTING CT TO REMAIN IN OPERATION UNTIL NEW COOLING TOWER INSTALLATION IS COMPLETE AND FULLY OPERATIONAL.
3. EXISTING 2-STAGE VERTICAL TURBINE PUMP TO REMAIN FOR USE. NOTE ONLY ONE PUMP RUNS AT A TIME.
4. EXISTING CONTROLS SHALL BE REMOVED AFTER INSTALLATION OF NEW DDC CONTROLS AND ACCEPTABLE COMPLETION OF THE NEW TOWER AND ACCEPTABLE START-UP. CONTROLS CONTRACTOR SHALL REVIEW EXISTING CONTROLS AND UPGRADE PER NEW WORK PLANS AND CONTROLS REQUIREMENTS.
5. EXISTING CHILLER, PIPING, VALVES, SUPPORTS AND ACCESSORIES TO REMAIN FOR REUSE. NOTE ONLY ONE CHILLER RUNS AT A TIME.
6. EXISTING MOTOR CONTROL CENTER (MCC) TO REMAIN. NOTE: THE MCC CONTAINS ALL THE EXISTING MOTOR STARTERS WITH HAND-OFF-AUTO SWITCHES AND INDICATION OF EQUIPMENT SERVED AND TAGGING INCLUDING THE EXISTING COOLING TOWERS AND PUMPS. THE POWER TO EXISTING FUSED DSW'S SERVING CT-1 (LABELED TOWER FAN 1) AND CT-2 (LABELED TOWER FAN FAN 2) SHALL BE SHUT-OFF AT THE CORRESPONDING MOTOR STARTER PRIOR TO START OF DEMOLITION.
7. EXISTING PIPING TO REMAIN. TYPICAL WHERE SOLID.
8. EXISTING PIPING, VALVES, AND SUPPORTS TO BE REMOVED. TYPICAL WHERE DASHED.
9. EXISTING 20 HP COOLING TOWER FUSED DSW TO BE REMOVED AND RELOCATED FOR NEW COOLING TOWER 20 HP MOTOR. REFER TO NEW WORK PLAN FOR NEW DSW LOCATION.
10. EXISTING 3" CW TO SUMP FOR FAST FILL TO REMAIN.
11. EXISTING 2" CW TO SUMP FOR NORMAL FILL AND FLOAT VALVE ASSEMBLY.
12. EXISTING FUSED DSW TO BE SHUT-OFF AND LOCKED AS SOON AS NEW COOLING TOWER INSTALLATION IS COMPLETE AND FULLY OPERATIONAL.
13. EXISTING PIPING, VALVES AND SUPPORTS TO REMAIN EXCEPT FOR ELBOW REPLACEMENT WITH A TEE AFTER INSTALLATION OF THE NEW COOLING TOWER, POWER SUPPLY, AND ALL NEW PIPING EXCEPT FOR THE NEW 8"CR CONNECTION FOR CT-1. REFER TO NEW WORK PLAN.
14. EXISTING PLYWOOD DECKING IN THE AREA OF WORK SHALL BE REMOVED BY THE CITY OF MOBILE AFTER DEMOLITION OF CT-1, CT-2, PIPING, AND ACCESSORIES. NEW PLYWOOD DECKING IN THE AREA OF WORK SHALL BE INSTALLED BY THE CITY OF MOBILE AS SOON AS NEW CT-1 IS INSTALLED.
15. PROPOSED CONTRACT CRANE LAYDOWN LOCATION IS IN THE CIVIC CENTER PARKING LOT SOUTH OF THE AREA OF WORK. VERIFY EXACT LOCATION WITH CRANE BEING USED IN ADVANCE OF CRANE ARRIVAL WITH APPROVAL FROM CITY OF MOBILE.

NEW WORK KEYNOTES

1. SECURELY INSTALL NEW COOLING TOWER (CT-1) PER MANUFACTURER'S INSTRUCTIONS. COORDINATE EXACT LOCATION OF NEW CT-1 WITH EXISTING STRUCTURAL BEAMS. SUPPORT CT-1 ON AS MANY BEAMS AS POSSIBLE. ADD HOT-DIPPED GALVANIZED STEEL I-BEAMS FOR STRUCTURAL REINFORCEMENT AS NEEDED. SECURELY CONNECT A NEW 8"CR PIPE TO EACH OF THE TWO NEW CT-1 CR CONNECTIONS. SECURELY ROUTE AND CONNECT ELECTRICAL FEEDERS TO EACH NEW 20 HP 460V/3PH MOTOR.
2. AFTER COMPLETION OF NEW CT-1 WITH APPROVED INSTALLATION, EXISTING CT-3 SHALL BE SHUT-DOWN. POWER SHALL BE SHUT-OFF AT THE EXISTING MCC MOTOR STARTER FOR CT-3 (LABELED TOWER FAN #3) AND THE LOCK THE EXISTING CT-3 DSW CLOSED. ABANDON EXISTING CT-3 IN PLACE.
3. EXISTING 2-STAGE VERTICAL TURBINE PUMPS TO REMAIN FOR USE. ONLY ONE PUMP SHALL RUN AT A TIME. BALANCE EACH PUMP TO 1,500 GPM.
4. 8" CR BYPASS WITH NORMALLY CLOSED BUTTERFLY VALVE. ROUTE 8" CR BYPASS TO SUMP BELOW.
5. EXISTING CHILLER, PIPING, VALVES, SUPPORTS AND ACCESSORIES TO REMAIN FOR REUSE. ONLY ONE CHILLER SHALL RUN AT A TIME. BALANCE EACH CHILLER CS FLOW FOR 1500 GPM.
6. EXISTING MOTOR CONTROL CENTER (MCC) TO REMAIN. NOTE: THE MCC CONTAINS ALL THE EXISTING MOTOR STARTERS WITH HAND-OFF-AUTO SWITCHES AND INDICATION OF EQUIPMENT SERVED AND TAGGING INCLUDING THE EXISTING COOLING TOWERS AND PUMPS. THE POWER TO EXISTING FUSED DSW'S WERE SUPPLIED BY THE EXISTING STARTERS IN THE MCC. RELABLE THE EXISTING "TOWER FAN 1" STARTER TO READ "NEW CT-1 WEST MOTOR". RELABLE THE EXISTING "TOWER FAN 2" STARTER TO "NEW CT-1 EAST MOTOR".
7. EXISTING PIPING TO REMAIN. TYPICAL WHERE LIGHT.
8. NEW 8"CR PIPING, VALVES AND PIPING SUPPORTS SHALL BE INSTALLED. NEW PIPING SUPPORTS SHALL BE CONSTRUCTED PER PIPE SUPPORT DETAIL ON SHEET M-1. LOCATE SUPPORTS NEAR ALL 90ø ELBOWS AND AT A MAXIMUM OF 8'-0" ON CENTER SPACING. TYPICAL WHERE DARK.
9. EXISTING RELOCATED FUSED DSW FED BY EXISTING MCC MOTOR STARTERS. REFER TO NEW WORK KEYNOTE 6 ABOVE. LABLE THE WEST LOCATED DSW AS "DSW FOR NEW CT-1 WEST MOTOR". LABLE THE EAST LOCATED DSW AS "DSW FOR NEW CT-1 EAST MOTOR". POWER FEEDS FOR EACH DSW SHALL BE FROM THE CORRESPONDING STARTER IN THE MCC. FEEDERS FROM THE STARTERS TO THE CORRESPONDING DSW AND FROM THE DSW TO THE CORRESPONDING MOTOR (WEST OR EAST AS APPLICABLE) SHALL EACH BE 4#8AWG CONDUCTORS WITH 1" RIGID GALVANIZED CONDUIT. NEATLY AND SECURELY INSTALL DSW'S AND CONDUITS.
10. EXISTING 3" CW TO SUMP FOR FAST FILL TO REMAIN.
11. EXISTING 2" CW TO SUMP FOR NORMAL FILL AND FLOAT VALVE ASSEMBLY.
12. EXISTING FUSED DSW TO BE SHUT-OFF AND LOCKED AS SOON AS NEW COOLING TOWER INSTALLATION IS COMPLETE AND FULLY OPERATIONAL.
13. EXISTING PIPING, VALVES AND SUPPORTS TO REMAIN EXCEPT FOR ELBOW REPLACEMENT WITH A NEW 8"x8"x8" TEE FITTING AFTER INSTALLATION OF THE NEW CT-1 AND ALL ITEMS REQUIRED FOR OPERATION EXCEPT FOR THE NEW 8"CR CONNECTION FOR CT-1. ROUTE NEW 8" CR PIPING TO WITHIN 24" OF EXISTING 8" ELBOW BEFORE REMOVING AND REPLACING WITH TEE.
14. NEW PLYWOOD DECKING IN THE AREA OF WORK SHALL BE INSTALLED BY THE CITY OF MOBILE AS SOON AS THE NEW CT-1 IS INSTALLED.
15. BOTTOM OUTLET FROM CT-1 TO SUMP. INSURE LOCATION OF BOTTOM OUTLET IS NOT PLACED OVER AND STRUCTURAL BEAMS OR ANY OBSTRUCTIONS EFFECTING WATER FLOW.
16. 20 HP 460V/3ø MOTOR. CONNECT TO RELOCATED DSW FED BY EXISTING MCC MOTOR STARTER SERVING OLD CT-1 (LABELED TOWER FAN 1). RELABLE STARTER AS "NEW CT-1 WEST MOTOR".
17. 20 HP 460V/3ø MOTOR. CONNECT TO RELOCATED DSW FED BY EXISTING MCC MOTOR STARTER SERVING OLD CT-2 (LABELED TOWER FAN 2). RELABLE STARTER AS "NEW CT-1 EAST MOTOR".
18. PROPOSED CONTRACT CRANE LAYDOWN LOCATION IS IN THE CIVIC CENTER PARKING LOT SOUTH OF THE AREA OF WORK. VERIFY EXACT LOCATION WITH CRANE BEING USED IN ADVANCE OF CRANE ARRIVAL WITH APPROVAL FROM CITY OF MOBILE.



Lewis Engineering & Associates, Inc.
1621 S. University Blvd. Suite A-3 Mobile, AL. 36609
Phone: (251) 660-9221 Cell: (251) 751-7466
kenny@lewisengineering.com

Cooling Tower Replacement
City of Mobile Project CC-031-23
Mobile Civic Center
Mobile, Alabama

ALABAMA REGISTERED No. 19867 PROFESSIONAL ENGINEER KENNETH L LEWIS 4-17-23

Sheet Title: DEMOLITION PLAN, NEW WORK PLAN, AND KEYNOTES

PERMIT ISSUE

Project Number: L2301

Date: 4/17/23

Drawn By: SPB

Checked By: KLL

Sheet No. **M-2**

Cooling Tower Technical Data Sheet

(1) AT 29-4K21

Project Details

Project Name : Mobile Civic Center
Location: TBD UNK

Date: 1/13/2023
Customer:
Contact:
Contact Email:

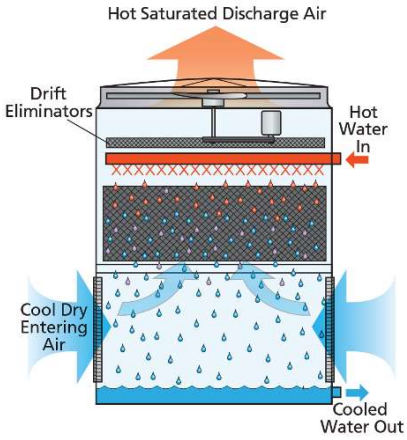

Product Description

The original Advanced Technology cooling tower provides an induced-draft, axial fan solution for a wide array of outdoor cooling capacities.

Selection Criteria	Total	Each Unit
Flow:	1,500.0 GPM	1,500.0 GPM
Fluid:	Water	Water
Entering Fluid Temp:	96.0°F	96.0°F
Leaving Fluid Temp:	86.0°F	86.0°F
Entering Wet Bulb:	81.0°F	81.0°F

Required Capacity

7,500.00 MBH
500.00 Tons

Unit Selected

One(1) EVAPCO AT 29-4K21 at 104.2% capacity (7,815.00 MBH)

Product Line is CTI/ECC Certified. Selection is rated in accordance with CTI Standard 201 RS.

Physical Data Per Unit

Overall Dimensions (WxLxH):	8'-5 1/2" x 21'-0" x 14'-3/4"
Operating Weight:	15,260 lbs
Shipping Weight:	10,970 lbs
Heaviest Section:	7,780 lbs

*weights and dimensions could vary depending on options selected

IBC Design Capability

IBC Standard Structural Design
1.0 Importance Factor Specified

Seismic(SDS):	up to 1.34 g, z/h = 0
Wind Load(P):	up to 119 psf

Fan Motor Data per Unit

Number of Fans:	2
# of Fan Motors:	2
Nameplate Power (460/3/60):	20.00 HP Per Motor
Total Connected Nameplate Power:	40.00 HP
Typical Nameplate FLA:	24.1 Amps Per Motor

*Nameplate FLA could vary

Additional Details Per Unit

Air Flow:	120,900 CFM

Hydraulic Data

Inlet Pressure Drop:	3.1 psi
Evaporated Water Rate:	12.00 GPM

Layout Criteria

From FACE B/D to wall:	3.00ft
From FACE A/C to wall:	3.00ft
Between FACE B/D ends:	3.00ft
Between FACE A/C sides:	6.00ft

Shipping Data

1 Basin Sections: (WxLxH): 102" x 252" x 65" ; 3190lbs each* | 1 Casing Sections: (WxLxH): 102" x 252" x 114" ; 7780lbs each*
*dimensions and weights above include shipping skids

Accessories

(1) ASHRAE 90.1-2019 Energy Compliant
(1) Oversized Outlet for Remote Sump; BFW/GRVD; 12"
(1) Ladder Extension; 4 Feet
(1) IBC Standard Structural Design
(1) EVAPAK Fill
(2) Fan Motor: Inverter Capable, Premium Efficient
(1) 1.0 Importance Factor Specified
(1) Ladder
(2) Fan Motor: Space Heaters

UNIT	COOLING TOWER		EVAPCO, INC.	DWG. #	T3092148-DRF-RS	REV.	-
MODEL #	AT 29-4K21	SCALE	NTS	SERIAL #		DATE	1/13/2023

NOTES:
1. (M)- FAN MOTOR LOCATION
2. HEAVIEST SECTION IS UPPER SECTION
3. MPT DENOTES MALE PIPE THREAD
   FPT DENOTES FEMALE PIPE THREAD
   BFW DENOTES BEVELED FOR WELDING
   GVD DENOTES GROOVED
   FLG DENOTES FLANGE
4. +UNIT WEIGHT DOES NOT INCLUDE ACCESSORIES (SEE ACCESSORY DRAWINGS)
5. 3/4" [19MM] DIA. MOUNTING HOLES. REFER TO RECOMENDED STEEL SUPPORT DRAWING.
6. DIMENSIONS LISTED AS FOLLOWS:
   ENGLISH FT-IN
   [METRIC] [mm]

Preliminary

FACE B

PLAN VIEW

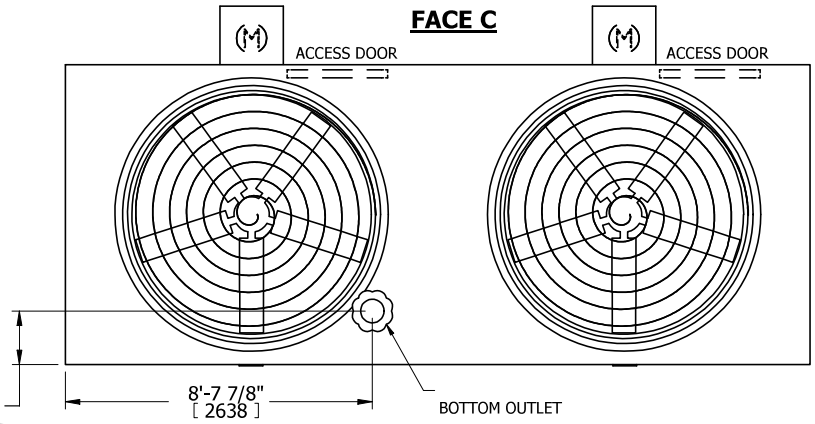

FACE A

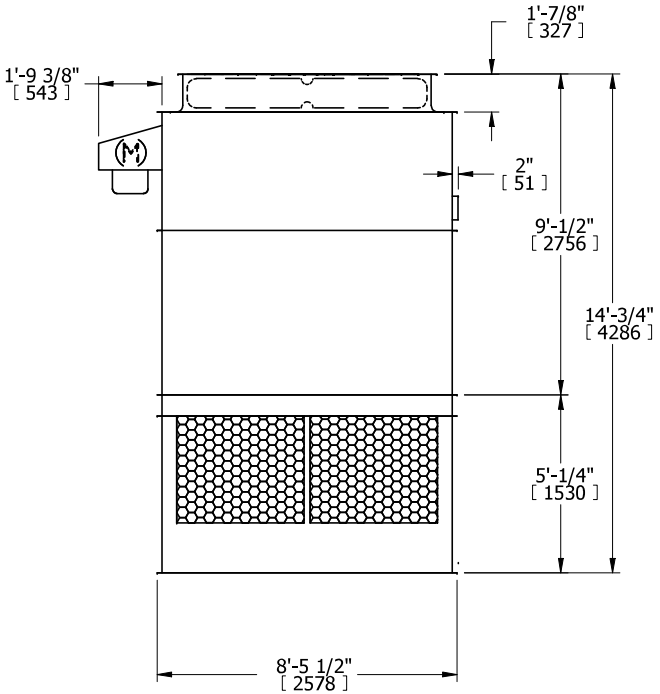

FACE B

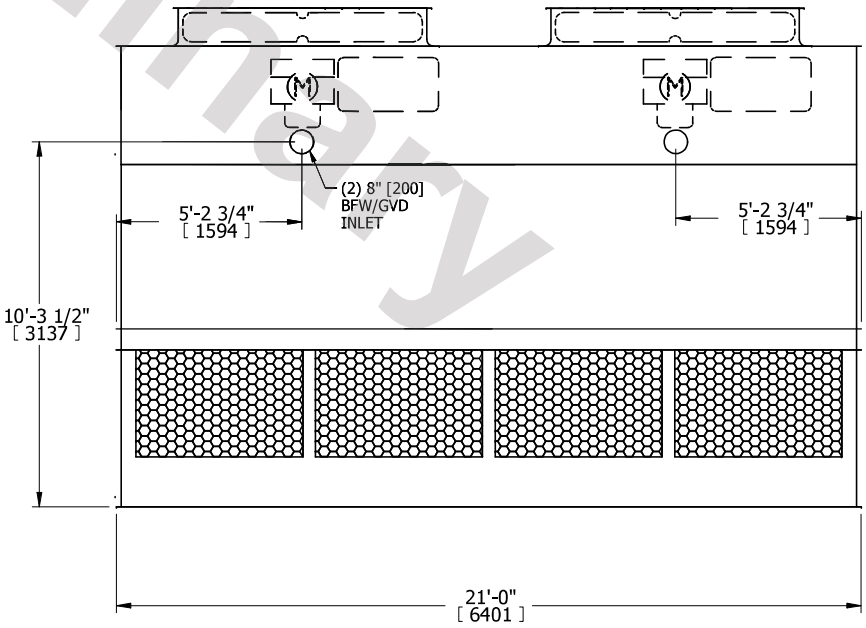

FACE A

SHIPPING WEIGHT	10970 lbs+ [4980] kg+	OPERATING WEIGHT	15260 lbs+ [6925] kg+	HEAVIEST SECTION WEIGHT	7780 lbs+ [3530] kg+	NO. OF SHIPPING SECTIONS	2	DRAWN BY:	JLG

UNIT	AT 29-4K21		DWG. #	SLIX0921-DF
TITLE	STEEL SUPPORT CONFIGURATION	**EVAPCO, INC.**	SCALE N.T.S.	DRAWN BY JLG

Preliminary

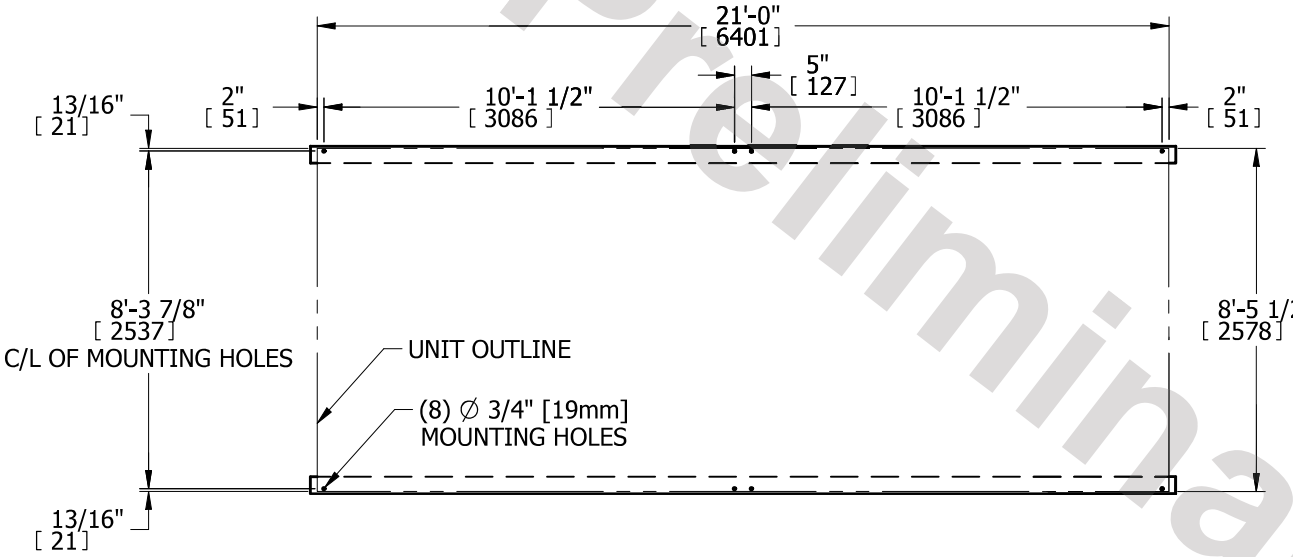

PLAN VIEW

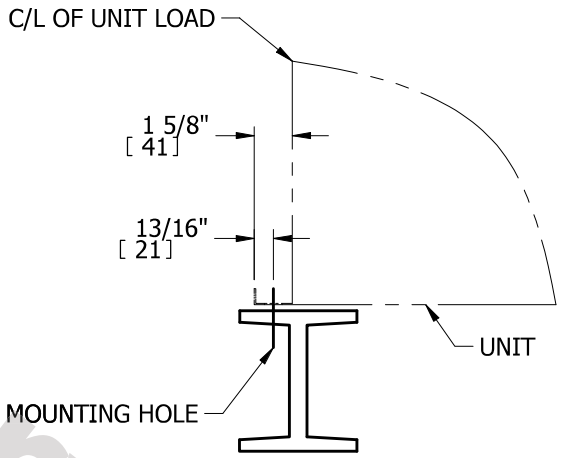

TYPICAL END VIEW

NOTES:

1. BEAMS SHOULD BE SIZED IN ACCORDANCE WITH ACCEPTED STRUCTURAL PRACTICES. MAXIMUM DEFLECTION OF BEAM UNDER UNIT TO BE 1/360 OF UNIT LENGTH NOT TO EXCEED 1/2" [13mm].
2. DEFLECTION MAY BE CALCULATED BY USING 55% OF THE OPERATING WEIGHT AS A UNIFORM LOAD ON EACH BEAM. SEE CERTIFIED PRINT FOR OPERATING WEIGHT.
3. SUPPORT BEAMS AND ANCHOR HARDWARE ARE TO BE FURNISHED BY OTHERS. ANCHOR HARDWARE TO BE ASTM A325 5/8" [16mm] BOLT OR EQUIVALENT.
4. BEAMS MUST BE LOCATED UNDER THE FULL LENGTH OF THE PAN SECTION.
5. SUPPORTING BEAM SURFACE MUST BE LEVEL. DO NOT LEVEL THE UNIT BY PLACING SHIMS BETWEEN THE UNIT MOUNTING FLANGE AND THE SUPPORTING BEAM.
6. THE FACTORY RECOMMENDED STEEL SUPPORT CONFIGURATION IS SHOWN. CONSULT THE FACTORY FOR ALTERNATE SUPPORT CONFIGURATIONS.
7. UNIT SHOULD BE POSITIONED ON STEEL SUCH THAT THE ANCHORING HARDWARE FULLY PENETRATES THE BEAM'S FLANGE AND CLEARS THE BEAM'S WEB.
8. WHEN VIBRATION ISOLATION IS REQUIRED, THE VIBRATION ISOLATORS (BY OTHERS) MUST BE LOCATED UNDER THE SUPPORTING BEAMS AND NOT BETWEEN THE SUPPORTING STEEL BEAMS AND THE UNIT.
9. DIMENSIONS LISTED AS FOLLOWS: ENGLISH FT-IN
   [METRIC] [mm]

UNIT	AT 29-4K21	EVAPCO, INC.	DWG. #	MHAU0000-DB	
TITLE	FAN MOTOR SPACE HEATERS		SCALE	N.T.S.	DRAWN BY BLL

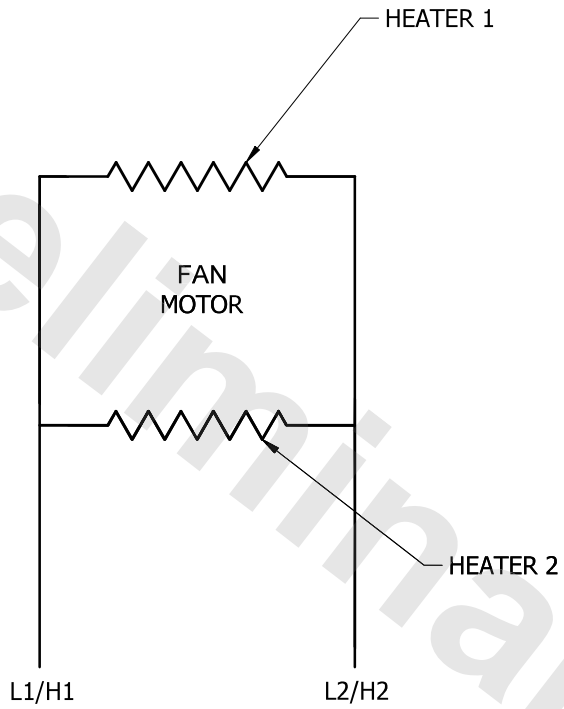

ELECTRICAL DATA:
VOLTAGE: 120V
CURRENT: <2AMPS

Preliminary

NOTE:
1. FAN MOTOR SPACE HEATERS SHOULD BE ENERGIZED WHEN MOTOR IS OFF TO PREVENT CONDENSATION IN THE MOTOR
2. FAN MOTOR SPACE HEATERS MUST BE SWITCHED OFF WHEN MOTOR IS RUNNING

UNIT			DWG. #	
AT 29-4K21	**EVAPCO, INC.**		LDT30921DC	
TITLE: SLOPED LADDER INSTALLATION PACKAGE		SCALE: N.T.S.	DRAWN BY: JSP	

Preliminary

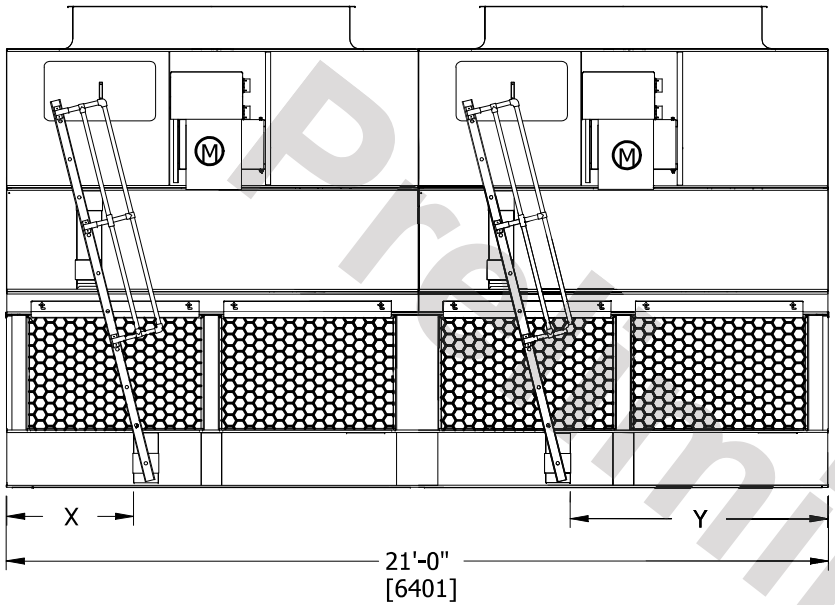

FACE C

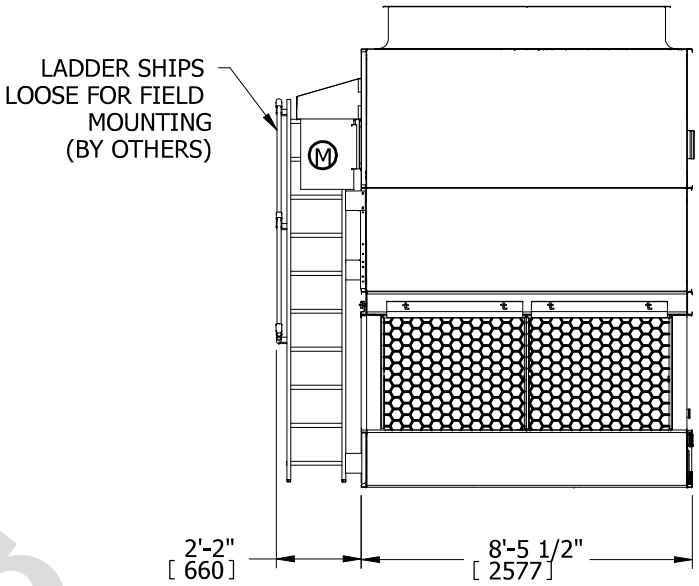

FACE B

NOTE:
1. REFER TO RIGGING PACK FOR LADDER AND PLATFORM MOUNTING INSTRUCTIONS.
2. DIMENSIONS LISTED AS FOLLOWS: ENGLISH FT-IN
   [METRIC] mm
3. Ⓜ-FAN MOTOR LOCATION

RIG LADDER BEFORE PIPING UNIT

* THE BOTTOM OF THE LADDER IS AT THE BASE OF THE UNIT. IF THE UNIT IS ELEVATED THEN A LADDER EXTENSION SHOULD BE CONSIDERED. (CONSULT FACTORY).
LADDER EXTENSIONS OF UP TO 3 FEET CAN BE ADDED WITHOUT ANY ADDITIONAL SUPPORT. FOR A LADDER EXTENSION LONGER THAN 3 FEET ADDITIONAL SUPPORT MUST BE PROVIDED BY OTHERS.

MODEL #	X DIM		Y DIM	
	FT-IN	[mm]	FT-IN	[mm]
AT/USS 29-121, 421 AT 29-2G21, 2H21, 2I21, 2J21	3'- 3/4 "	933	6'-9"	2057
AT/USS 29-221, 321, 621, 821 AT 29-3G21, 3H21, 3I21, 3J21, 3K21	3'-3 11/16"	1008	6'-6 1/16"	1983
AT/USS 29-521, 721, 921 AT 29-4G21, 4H21, 4I21, 4J21, 4K21, 4L21	3'-6 15/16"	1091	6'-2 3/4 "	1899

CUSTOMER INSTALLATION NOTES:
A. REMOVE LADDER BRACKET MOUNTING BOLTS (1) FROM LADDER MOUNTING CHANNELS (2) ON PAN CASING SECTIONS.
B. LOOSEN, BUT DO NOT REMOVE, LADDER BRACKET ASSY. BOLTS (3).
C. TO ASSEMBLE, SLIDE LADDER BRACKET ASSY. (4) OVER LADDER MOUNTING CHANNELS (2) LOCATED ON PAN AND CASING (DO NOT REMOVE LADDER BRACKET ASSY. (4) FROM LADDER.)
D. ALIGN HOLES AND REINSTALL LADDER BRACKET MOUNTING BOLTS (1) THROUGH LADDER BRACKET ASSY. (4) AND LADDER MOUNTING CHANNELS (2).
E. TIGHTEN ALL BOLTS.
F. TIGHTEN ADJUSTING SCREW (5) IN THE ADJUSTABLE MOUNTING BRACKETS WHEN APPLICABLE.

