PROJECT MANUAL

FOR

LAVRETTA PARK - PICKLEBALL COURTS

200 West Parkway Drive, Mobile, Alabama 36608
PR-073-22

and

HILLSDALE PARK - PICKLEBALL COURTS

558 East Felhorn Road, Mobile, Alabama 36608
PR-041-22

Mobile, Alabama 36608

October 16, 2023

WAS Design, Inc.
218 North Alston Street
Foley, Alabama 36535

and

City of Mobile
Architectural Engineering Department
205 Government Plaza
P.O. Box 1827
Mobile, Alabama 36633-1827

Bid Date: November 8, 2023

INDEX TO DOCUMENTS

BIDDING AND CONTRACT REQUIREMENTS:

SECTION 00100 INVITATION TO BID

SECTION 00200 INSTRUCTIONS TO BIDDERS - AIA DOCUMENT A701

SECTION 00300 SUPPLEMENTARY INSTRUCTIONS TO BIDDERS

SECTION 00400 LAVRETTA PARK – PICKLEBALL COURTS - BID FORM

SALES TAX FORM C-3A

SUBCONTRACTING AND MAJOR SUPPLIER PLAN

SECTION 00400 HILLSDALE PARK – PICKLEBALL COURTS - BID FORM

SALES TAX FORM C-3A

SUBCONTRACTING AND MAJOR SUPPLIER PLAN

SECTION 00500 STANDARD FORM OF AGREEMENT BETWEEN OWNER AND CONTRACTOR - AIA DOCUMENT A101

SECTION 00600 BONDS, CERTIFICATES AND AFFIDAVITS

PERFORMANCE BOND (OWNER'S MODIFIED FORM)

LABOR AND MATERIAL PAYMENT BOND (OWNER'S MODFIED FORM)

E-VERIFY DOCUMENTATION (SAMPLE)

APPLICATION AND CERTIFICATION FOR PAYMENT - AIA DOCUMENT G702 AND AIA DOCUMENT G703

DBE COMPLIANCE DBE UTILIZATION REPORT

CERTIFICATE OF SUBSTANTIAL COMPLETION – AIA DOCUMENT G704

CONTRACTOR'S AFFIDAVIT OF PAYMENT OF DEBTS AND CLAIMS - AIA DOCUMENT G706

CONTRACTOR'S AFFIDAVIT OF RELEASE OF LIENS - AIA DOCUMENT G706A

CONSENT OF SURETY TO FINAL PAYMENT - AIA DOCUMENT G707

REQUEST FOR TAXPAYER INDEIFICATION NUMBER AND CERTIFICATION W9 TAX FORM, CITY OF MOBILE VENDOR INFORMATION FORM

SECTION 00700 GENERAL CONDITIONS OF THE CONTRACT FOR CONSTRUCTION - AIA DOCUMENT A201

SPECIFICATIONS:

DIVISION 1: GENERAL REQUIREMENTS

SECTION 01010 SCOPE OF WORK

SECTION 01050 FIELD ENGINEERING

SECTION 01210 ALLOWANCES

SECTION 01220 UNIT PRICES

SECTION 01230 ALTERNATES

SECTION 01251 PRE-BID SUBSTITUTION PROCEDURES

SECTION 01260 CONTRACT MODIFICATION PROCEDURES

SECTION 01290 PAYMENT PROCEDURES

SECTION 01310 PROJECT MANAGEMENT AND COORDINATION

SECTION 01330 SUBMITTAL PROCEDURES

SECTION 01401 QUALITY CONTROL TESTING PROCEDURES

SECTION 01500 CONSTRUCTION FACILITIES AND TEMPORARY CONTROLS

SECTION 01700 EXECUTION REQUIREMENTS

SECTION 01731 CUTTING AND PATCHING

SECTION 01732 SELECTIVE DEMOLITION

SECTION 01735 SUBSTITUTION PROCEDURES

SECTION 01770 CLOSEOUT PROCEDURES

SECTION 01782 OPERATION AND MAINTENANCE DATA

SECTION 01783 PROJECT RECORD DOCUMENTS

DIVISION 2 SITE WORK

SECTION 02070 SELECTIVE SITE DEMOLITION

SECTION 02230 SITE CLEARING

SECTION 02300 EARTHWORK

SECTION 02462 PICKLEBALL COURT SURFACING

SECTION 02513 ASPHALTIC CONCRETE PAVING

SECTION 02751 CEMENT CONCRETE PAVEMENT

SECTION 02821 CHAIN LINK FENCES AND GATES

SECTION 02900 LANDSCAPING

SECTION 03300 CAST-IN PLACE CONCRETE

ILLUSTRATIONS:

SHEET NO. SHEET TITLE

1 OF 1 PROJECT SIGN

DRAWINGS:

1.1 List of Drawings

List of Drawings

A. Drawings consist of the Contract Drawings and other drawings listed on the Table of Contents page of the separately bound drawing set titled A Landscape Development Plan for Lavretta Park – Pickleball Courts and Hillsdale Park – Pickleball Courts, dated September 29, 2023, as modified by subsequent Addenda and Contract modifications.

SECTION 00100
INVITATION TO BID

You are invited to submit a sealed bid for construction of the following facility:

PROJECT NAME: Lavretta Park – Pickleball Courts
PROJECT LOCATION: Mobile, Alabama 36608
PROJECT NUMBER: PR-073-22

PROJECT NAME: Hillsdale Park – Pickleball Courts
PROJECT LOCATION: Mobile, Alabama 36608
PROJECT NUMBER: PR-041-22

1 BID DATE:

A. Sealed Bids will be received and clocked in until 2:15 PM local time, Wednesday, the 8th day of November, 2023. Bidders shall insert sealed Bids into a receptacle, marked "City of Mobile Bids", located in the elevator lobby outside the office of the City Clerk Office, 9th Floor South Tower, Government Plaza, 205 Government Street, Mobile, Alabama 36602.

B. All Bids not clocked in at the City Clerk's Office prior to the time specified, or Bids received after the specified time, will be automatically rejected and returned immediately, unopened.

C. Bids will be publicly opened and read at 2:30 PM local time, in the Atrium Lobby of Government Plaza.

2 SPECIFICATIONS AND DRAWINGS:

A. Specifications and Drawings are on file and may be examined and obtained from the following location: https://www.cityofmobile.org/bids/

B. Bidders shall use complete sets of Bid Documents in preparing their bid. Neither the Owner nor Architect/Engineer assumes responsibility for errors or misinterpretations resulting from the use of incomplete sets of Bid Documents.

C. **Addenda will be issued via the City of Mobile website.**

D. **This is a tax exempt project and shall be certified by the requirements of the Alabama Department of Revenue. Bidders shall NOT include sales and use taxes with their bid amounts. Bidders shall complete the Sales Tax Form C-3A and include it as an attachment to their Bid Form (see Section 00400).**

E. Product Substitutions must be pre-approved before the bid (see Section 01400 for requirements).

3 BID SURETY: Required on Bids $10,000.00 or more

A. A Cashier's Check drawn on a bank registered to do business in the State of Alabama and which is a member of the Federal Deposit Insurance Corporation, or a Bid Bond

payable to Owner, City of Mobile, in the amount of 5% of the Base Bid, but in no event more than $10,000.00 is required to accompany Bid.

B. Bid Bond must be issued by a Surety licensed to do business in the State of Alabama. Bidder shall require the attorney in fact who executes the required bonds on behalf of the surety to affix to the bond a certified and current copy of the power of attorney.

C. No Bid may be modified, withdrawn, or canceled for a period of sixty (60) days after the time designated above for receipt of bids.

D. The City of Mobile will have sixty (60) days from the bid opening date to award contract.

4 SURETY QUALIFICATIONS:

A. A Surety authorized to do business in the State of Alabama must issue Bonds.

B. If the Base Bid is $50,000 or more, the Surety must have a minimum rating of A/Class VI as reported by the latest issue of Best Key Rating Guide Property-Casualty published by Alfred M. Best Company, Inc.

5 IRREGULARITIES AND REJECTION:

A. The City of Mobile reserves the right to waive irregularities in the Bid and in Bidding, and to reject any or all Bids.

6 BIDDER QUALIFICATIONS:

A. Bids for Work costing $50,000 or more must be licensed pursuant to current Alabama law and of classifications compliant with the State of Alabama Licensing Board for General Contractors. Note that if the contract amount is $10,000 or greater, both a Performance Bond and a Labor and Material Payment Bond shall be required. **Before Bidding, Contractor shall verify their license classification of their General Contractors license with the State of Alabama Licensing Board for General Contractors to verify classification is acceptable to perform 51% of the Scope of Work.**

B. In case of a joint venture of two or more Contractors, the amount for the bid shall be within the maximum bid limitations as set by the State of Alabama Licensing Board for General Contractors of at least one of the partners to the joint venture.

7 NON-RESIDENT CONTRACTORS:

A. Except for contracts funded in whole or part with funds received from a federal agency, preference shall be given to resident Contractors on the same basis as the nonresident Contractor's state awards contracts to Alabama Contractors bidding in similar circumstances.

B. Nonresident Bidders shall, prior to submitting a bid, be registered with the Alabama Secretary of State and the Alabama Department of Revenue. Provide the Secretary of State Business "Entity ID Number" on the Bid Form in the space provided.

8 PRE-BID CONFERENCE:

A. A Pre-Bid Conference shall be held on October 19, 2023, **at Architectural Engineering Conference Room, 205 Government Street, South Tower, 5th Floor**,

at 10:00 AM local time. A representative of the Bidder is encouraged to be present at the meeting. However, if no representative can be present in person, the Bidder shall contact the Project Manager at 251-208-7635, at least 24 hours prior to the meeting, in order to coordinate attendance of the meeting by conference call. Bidders are encouraged to participate in the Pre-Bid Conference, visit the site prior to submitting a Bid and include all costs associated with the project in their Bids.

B. Minutes of this conference will be made as an Addendum for the project.

9 BID SUBMITTAL:

A. Bids must be submitted on copies of the Bid Forms furnished in the bidding documents.

B. Bid, with Bid Security, Sales Tax Form C-3A, City of Mobile Subcontracting and Major Supplier Plan and other supporting data specified, shall be contained in a sealed, opaque envelope, approximately 9x12 inches or larger and be marked on the outside with the words **"SEALED BID FOR LAVRETTA PARK – PICKLEBALL COURTS - PROJECT NUMBER: PR-073-22" and "SEALED BID FOR HILLSDALE PARK – PICKLEBALL COURTS - PROJECT NUMBER: PR-041-22".**

C. The Bid envelope shall be clearly addressed to the Owner as indicated on the Bid Form and include the bid date, the name, address and State License number and classification of the Bidder issued by the State of Alabama Licensing Board for General Contractors.

D. All Bids of $50,000 or more must include the bidder's State of Alabama General Contractor's License information written on the outside of the bid envelope. Any bid submitted without such license information may be rejected and returned to the bidder unopened.

E. In addition, in large letters on both front and back of envelope, write the following: **DO NOT OPEN UNTIL TWO-THIRTY PM, NOVEMBER 8, 2023**.

F. For a bid to be valid it shall be delivered at designated location prior to time and date for receipt of Bids indicated in INVITATION TO BID, or prior to any extension thereof issued to Bidders. After that time no Bid will be received or withdrawn.

G. When sent by mail, preferably special delivery, express service, or registered mail, the sealed Bid, marked as indicated above, <u>shall be enclosed in another envelope for mailing such that the exterior mailing container or envelope may be opened without revealing the contents of the Bid. It is the Contractors responsibility to assure delivery of the bid to the City Clerk's Office prior the time and date established.</u>

10 EQUAL OPPORTUNITY:

A. The City of Mobile, Alabama is an Equal Opportunity Employer and requires that all Contractors comply with the Equal Employment Opportunity laws and the provisions of the Bid Documents in this regard.

B. The City of Mobile also encourages and supports the utilization of Minority Business Enterprises on these and all other publicly solicited Bids, and shall be in compliance with the City of Mobile's Minority Utilization Plan as adopted by the City Council.

C. Contractor shall provide an appropriately completed copy of the "City of Mobile Subcontracting and Major Supplier Plan" in the envelope with their Bid Form. Form shall document DBE Subcontractors participating in the project and, should the total % of DBE participation not meet the 15% minimum, all efforts to obtain DBE Subcontractors shall be documented on or attached to the DBE Form when submitted. During construction, contractors are required to submit a "DBE Utilization Report" with every Pay Application.

D. Contractors should contact the City of Mobile, Supplier Diversity Manager for assistance with DBE Subcontractor information and any questions regarding the DBE Compliance Forms. Contact Archnique Kidd at 251-208-7967.

E. A Directory of DBE Vendors can be found at the following location: https://workwith.cityofmobile.org/

11 ADDITIONAL BIDDING PROCEDURES:

A. Refer to the complete information in the Bid Documents prior to submitting a bid. Additional Bidding Procedure information is contained therein, particularly in the specification Section 00200 "Instructions to Bidders - AIA Document A701" and in the specification Section 00300 "Supplementary Instructions to Bidders".

12 STATE OF ALABAMA IMMIGRATION ACT

"The State of Alabama, under the Beason-Hammon Alabama Taxpayer and Citizen Protection Act, Act No. 2011-535, Alabama Code Section 31-13-1, et. Seq., requires:

A. That the Contractor shall be enrolled in the E-Verify Program, shall participate in that Program during the performance of the contract, and shall verify the immigration status of every employee who is required to be verified, according to the applicable federal rules and regulations; and

B. That it will attach to the contract the company's documentation of enrollment in E-Verify.

C. The subcontractor must also enroll in the E-Verify Program prior to performing any work on the contract and shall attach to its sworn affidavit documentation establishing that the subcontractor is enrolled in the E-Verify Program.

13 PUBLIC CONTRACTS WITH ENTITIES ENGAGING IN CERTAIN BOYCOTT ACTIVITIES

A. By signing this contract, Contractor further represents and agrees that it is not currently engaged in, nor will it engage in, any boycott of a person or entity based in or doing business with a jurisdiction with which the State of Alabama can enjoy open trade.

END OF SECTION 00100

SECTION 00200
INSTRUCTIONS TO BIDDERS

PART 1 GENERAL

A. This section includes the INSTRUCTIONS TO BIDDERS, AIA Document A701 to be utilized with the Owner's most recent modifications and which shall be used in conjunction with the entire Bid Documents and Section 00300 SUPPLEMENTARY INSTRUCTIONS TO BIDDERS for this project.

DRAFT

AIA® Document A701™ – 2018

Instructions to Bidders

for the following Project:
(Name, location, and detailed description)

«Lavretta Park – Pickleball Courts»
«200 West Parkway Drive»
«Mobile, Alabama 36608»
«PR-073-22»
«and»
«Hillsdale Park – Pickleball Courts»
«558 East Felhorn Road»
«Mobile, Alabama 36608»
«PR-041-22»

THE OWNER:
(Name, legal status, address, and other information)

«City of Mobile »« »
«PO Box 1827 »
«Mobile, Alabama 36633-1827 »
« »

THE ARCHITECT:
(Name, legal status, address, and other information)

«WAS Design, Inc.»
«218 North Alston Street»
«Foley, Alabama 36535»

TABLE OF ARTICLES

1 DEFINITIONS

2 BIDDER'S REPRESENTATIONS

3 BIDDING DOCUMENTS

4 BIDDING PROCEDURES

5 CONSIDERATION OF BIDS

6 POST-BID INFORMATION

7 PERFORMANCE BOND AND PAYMENT BOND

8 FORM OF AGREEMENT BETWEEN OWNER AND CONTRACTOR

9 NONDISCRIMINATION

10 USE OF DOMESTIC PRODUCTS

11 PREFERENCE TO RESIDENT CONTRACTORS

ADDITIONS AND DELETIONS: The author of this document has added information needed for its completion. The author may also have revised the text of the original AIA standard form. An *Additions and Deletions Report* that notes added information as well as revisions to the standard form text is available from the author and should be reviewed.

This document has important legal consequences. Consultation with an attorney is encouraged with respect to its completion or modification.

FEDERAL, STATE, AND LOCAL LAWS MAY IMPOSE REQUIREMENTS ON PUBLIC PROCUREMENT CONTRACTS. CONSULT LOCAL AUTHORITIES OR AN ATTORNEY TO VERIFY REQUIREMENTS APPLICABLE TO THIS PROCUREMENT BEFORE COMPLETING THIS FORM.

It is intended that AIA Document G612™–2017, Owner's Instructions to the Architect, Parts A and B will be completed prior to using this document.

ELECTRONIC COPYING of any portion of this AIA® Document to another electronic file is prohibited and constitutes a violation of copyright laws as set forth in the footer of this document.

AIA Document A701™ – 2018. Copyright © 1970, 1974, 1978, 1987, 1997 and 2018 by The American Institute of Architects. All rights reserved. The "American Institute of Architects," "AIA," the AIA Logo, and "AIA Contract Documents" are registered trademarks and may not be used without permission. This draft was produced by AIA software at 16:08:12 ET on 05/27/2020 under Order No.1224073061 which expires on 08/28/2020, is not for resale, is licensed for one-time use only, and may only be used in accordance with the AIA Contract Documents® Terms of Service. To report copyright violations, e-mail copyright@aia.org.
User Notes: (1364603258)

12 PRE-BID REQUIREMENTS

13 POST-BID REQUIREMENTS

DRAFT

AIA Document A701™ – 2018. Copyright © 1970, 1974, 1978, 1987, 1997 and 2018 by The American Institute of Architects. All rights reserved. The "American Institute of Architects," "AIA," the AIA Logo, and "AIA Contract Documents" are registered trademarks and may not be used without permission. This draft was produced by AIA software at 16:08:12 ET on 05/27/2020 under Order No.1224073061 which expires on 08/28/2020, is not for resale, is licensed for one-time use only, and may only be used in accordance with the AIA Contract Documents® Terms of Service. To report copyright violations, e-mail copyright@aia.org.
User Notes: (1364603258)

ARTICLE 1 DEFINITIONS

§ 1.1 Bidding Documents include the Bidding Requirements and the Proposed Contract Documents. The Bidding Requirements consist of the advertisement or invitation to bid, Instructions to Bidders, supplementary instructions to bidders, the bid form, and any other bidding forms. The Proposed Contract Documents consist of the unexecuted form of Agreement between the Owner and Contractor and that Agreement's Exhibits, Conditions of the Contract (General, Supplementary and other Conditions), Drawings, Specifications, all Addenda, and all other documents enumerated in Article 8 of these Instructions.

§ 1.2 Definitions set forth in the General Conditions of the Contract for Construction, or in other Proposed Contract Documents apply to the Bidding Documents.

§ 1.3 Addenda are written or graphic instruments issued by the Architect, which, by additions, deletions, clarifications, or corrections, modify or interpret the Bidding Documents.

§ 1.4 A Bid is a complete and properly executed proposal to do the Work for the sums stipulated therein, submitted in accordance with the Bidding Documents.

§ 1.5 The Base Bid is the sum stated in the Bid for which the Bidder offers to perform the Work described in the Bidding Documents, to which Work may be added or deleted by sums stated in Alternate Bids.

§ 1.6 An Alternate Bid (or Alternate) is an amount stated in the Bid to be added to or deducted from, or that does not change, the Base Bid if the corresponding change in the Work, as described in the Bidding Documents, is accepted.

§ 1.7 A Unit Price is an amount stated in the Bid as a price per unit of measurement for materials, equipment, or services, or a portion of the Work, as described in the Bidding Documents.

§ 1.8 A Bidder is a person or entity who submits a Bid and who meets the requirements set forth in the Bidding Documents. A Bidder must be licensed by the State Licensing Board for General Contractors if the amount for the Contract exceeds the amount established by said Board.

§ 1.9 A Sub-bidder is a person or entity who submits a bid to a Bidder for materials, equipment, or labor for a portion of the Work. A Sub-bidder performing Work must be licensed by the State Licensing Board for General Contractors if the Sub-bidders' contract amount exceeds that established by said Board.

1.10 A non-resident Bidder or Sub-bidder is one who

a. Is neither organized nor existing under the laws of the State of Alabama
b. nor maintains its principal place of business in the State of Alabama.

A non-resident contractor who has maintained a permanent branch office within the State of Alabama for at least five (5) continuous years shall not thereafter be deemed to be a non-resident contractor so long as such contractor continues to maintain a branch office within Alabama.

ARTICLE 2 BIDDER'S REPRESENTATIONS

§ 2.1 By submitting a Bid, the Bidder represents that:

.1 the Bidder has read and understands the Bidding Documents;
.2 the Bidder understands how the Bidding Documents relate to other portions of the Project, if any, being bid concurrently or presently under construction;
.3 the Bid complies with the Bidding Documents;
.4 the Bidder has visited the site, become familiar with local conditions under which the Work is to be performed, and has correlated the Bidder's observations with the requirements of the Proposed Contract Documents;
.5 the Bid is based upon the materials, equipment, and systems required by the Bidding Documents without exception; and
.6 the Bidder has read and understands the provisions for liquidated damages, if any, set forth in the form of Agreement between the Owner and Contractor.

§ 2.2 The Bidder is licensed by the State Licensing Board for General Contractors and the amount Bid does not exceed the Bid Limit stipulated in the Bidder's License and by the City of Mobile.

AIA Document A701™ – 2018. Copyright © 1970, 1974, 1978, 1987, 1997 and 2018 by The American Institute of Architects. All rights reserved. The "American Institute of Architects," "AIA," the AIA Logo, and "AIA Contract Documents" are registered trademarks and may not be used without permission. This draft was produced by AIA software at 16:08:12 ET on 05/27/2020 under Order No.1224073061 which expires on 08/28/2020, is not for resale, is licensed for one-time use only, and may only be used in accordance with the AIA Contract Documents® Terms of Service. To report copyright violations, e-mail copyright@aia.org.
User Notes: (1364603258)

§ 2.3 Each and every Contractor belonging to or comprising a part of any entity that is bidding as a joint venture or association involving two or more contractors is licensed by the State Licensing Board for General Contractors and that the amount Bid does not exceed the Bid limit stipulated in at least one of their licenses.

§ 2.4 Any non-resident Bidder is authorized by the Secretary of State of Alabama and is registered with Alabama Department of Revenue to transact business in Alabama.

§ 2.5 Joint Ventures or Associations of Contractors, whether the same are Bidders or Subcontractors of Bidders, will remain in existence until all insurance and warranty requirements for the Project have been fulfilled.

ARTICLE 3 BIDDING DOCUMENTS

§ 3.1 Distribution

§ 3.1.1 Bidders shall obtain complete Bidding Documents, as indicated below, from the issuing office designated in the advertisement or invitation to bid, for the deposit sum, if any, stated therein.

§ 3.1.2 Any required deposit shall be refunded to Bidders who submit a bona fide Bid and return the paper Bidding Documents in good condition within ten days after receipt of Bids. The cost to replace missing or damaged paper documents will be deducted from the deposit. A Bidder receiving a Contract award may retain the paper Bidding Documents, and the Bidder's deposit will be refunded.

§ 3.1.3 Bidding Documents will not be issued directly to Sub-bidders unless specifically offered in the advertisement or invitation to bid, or in supplementary instructions to bidders.

§ 3.1.4 Bidders shall use complete Bidding Documents in preparing Bids. Neither the Owner nor Architect assumes responsibility for errors or misinterpretations resulting from the use of incomplete Bidding Documents.

§ 3.1.5 The Bidding Documents will be available for the sole purpose of obtaining Bids on the Work. No license or grant of use is conferred by distribution of the Bidding Documents.

§ 3.2 Modification or Interpretation of Bidding Documents

§ 3.2.1 The Bidder shall carefully study the Bidding Documents, shall examine the site and local conditions, and shall notify the Architect of errors, inconsistencies, or ambiguities discovered and request clarification or interpretation pursuant to Section 3.2.2.

§ 3.2.2 Requests for clarification or interpretation of the Bidding Documents shall be submitted by the Bidder in writing and shall be received by the Architect at least five (5) calendar days prior to the date for receipt of Bids.

§ 3.2.3 Modifications and interpretations of the Bidding Documents shall be made by Addendum. Modifications and interpretations of the Bidding Documents made in any other manner shall not be binding, and Bidders shall not rely upon them.

§ 3.2.4 The Contract Drawings and Specifications are intended to cooperate and agree, but should conflicts or difference be found to exist between the requirements within either and clarification has not been obtained in accordance with the above procedure prior to Bidding, then the most costly and/or restrictive interpretation by the decision of the Architectural Engineering Department Director will be final.

§ 3.3 Substitutions

§ 3.3.1 The materials, products, and equipment described in the Bidding Documents establish a standard of required function, dimension, appearance, and quality to be met by any proposed substitution.

§ 3.3.2 Substitution Process

§ 3.3.2.1 Written requests for substitutions shall be received by the Architect at least fifteen (15) calendar days prior to the date for receipt of Bids. Requests shall be submitted in the same manner as that established for submitting clarifications and interpretations in Section 3.2.2.

§ 3.3.2.2 Bidders shall submit substitution requests on a Substitution Request Form if one is provided in the Bidding Documents.

AIA Document A701™ – 2018. Copyright © 1970, 1974, 1978, 1987, 1997 and 2018 by The American Institute of Architects. All rights reserved. The "American Institute of Architects," "AIA," the AIA Logo, and "AIA Contract Documents" are registered trademarks and may not be used without permission. This draft was produced by AIA software at 16:08:12 ET on 05/27/2020 under Order No.1224073061 which expires on 08/28/2020, is not for resale, is licensed for one-time use only, and may only be used in accordance with the AIA Contract Documents® Terms of Service. To report copyright violations, e-mail copyright@aia.org.
User Notes: (1364603258)

§ 3.3.2.3 If a Substitution Request Form is not provided, requests shall include (1) the name of the material or equipment specified in the Bidding Documents; (2) the reason for the requested substitution; (3) a complete description of the proposed substitution including the name of the material or equipment proposed as the substitute, performance and test data, and relevant drawings; and (4) any other information necessary for an evaluation. The request shall include a statement setting forth changes in other materials, equipment, or other portions of the Work, including changes in the work of other contracts or the impact on any Project Certifications (such as LEED), that will result from incorporation of the proposed substitution.

§ 3.3.3 The burden of proof of the merit of the proposed substitution is upon the proposer. The Architect's decision of approval or disapproval of a proposed substitution shall be final.

§ 3.3.4 If the Architect approves a proposed substitution prior to receipt of Bids, such approval shall be set forth in an Addendum. Approvals made in any other manner shall not be binding, and Bidders shall not rely upon them.

§ 3.3.5 No substitutions will be considered after the Contract award unless specifically provided for in the Contract Documents.

§ 3.3.6 See Division One Section "Substitution Procedures", if included in Specification.

§ 3.4 Addenda

§ 3.4.1 Addenda will be transmitted to Bidders known by the issuing office to have received complete Bidding Documents.

§ 3.4.2 Addenda will be available where Bidding Documents are on file.

§ 3.4.3 Addenda will be issued no later than two (2) days prior to the date for receipt of Bids, except an Addendum withdrawing the request for Bids or one which includes postponement of the date for receipt of Bids.

§ 3.4.4 Prior to submitting a Bid, each Bidder shall ascertain that the Bidder has received all Addenda issued, and the Bidder shall acknowledge their receipt in the Bid.

ARTICLE 4 BIDDING PROCEDURES

§ 4.1 Preparation of Bids

§ 4.1.1 Bids shall be submitted on the forms included with or identified in the Bidding Documents. No bid will be considered unless made out and submitted on a copy of the Bid Form, Section 00410. Additional Bid Forms will be furnished to prospective Bidders upon request.

§ 4.1.2 All blanks on the bid form shall be legibly executed. Paper bid forms shall be executed in a non-erasable medium.

§ 4.1.3 Sums shall be expressed in both words and numbers, unless noted otherwise on the bid form. In case of discrepancy, the amount entered in words shall govern.

§ 4.1.4 Edits to entries made on paper bid forms must be initialed by the signer of the Bid.

§ 4.1.5 All requested Alternates shall be bid. If no change in the Base Bid is required, enter "No Change" or as required by the bid form.

Unit Prices: Supply requested Unit Prices where shown on the Bid Form, Such Unit Prices shall be used to adjust the Contract Amount where the quantities shown on the Drawings and/or Specifications do not reflect amounts required for completion of the work. Where Completion of the Work requires quantities in excess of those shown on the drawings and specifications, unit prices shall be used to compute an extra payment to the Contractor. Where completion of work required quantities less than those on the Drawings and/or specifications, unit prices shall be used to compute a credit to the Owner.

Contingency Allowance: As shown on the Bid Form, Contractor shall add the amount of the contingency allowance to the Base Bid to derive the Total Bid. The contingency allowance shall cover cost of material, labor, overhead, profit

AIA Document A701™ – 2018. Copyright © 1970, 1974, 1978, 1987, 1997 and 2018 by The American Institute of Architects. All rights reserved. The "American Institute of Architects," "AIA," the AIA Logo, and "AIA Contract Documents" are registered trademarks and may not be used without permission. This draft was produced by AIA software at 16:08:12 ET on 05/27/2020 under Order No.1224073061 which expires on 08/28/2020, is not for resale, is licensed for one-time use only, and may only be used in accordance with the AIA Contract Documents® Terms of Service. To report copyright violations, e-mail copyright@aia.org.
User Notes: (1364603258)

and other expenses for complete installation of items of additional work as required for a complete functional project. The contingency allowance shall be used to fund unforeseen conditions not covered in the construction documents and shall be subject to the provisions of change orders. Upson the completion of work any unused portion of the contingency allowance shall be credited to the Owner by change order.

§ 4.1.6 Where two or more Bids for designated portions of the Work have been requested, the Bidder may, without forfeiture of the bid security, state the Bidder's refusal to accept award of less than the combination of Bids stipulated by the Bidder. The Bidder shall neither make additional stipulations on the bid form nor qualify the Bid in any other manner.

§ 4.1.7 Each copy of the Bid shall state the legal name and legal status of the Bidder. As part of the documentation submitted with the Bid, the Bidder shall provide evidence of its legal authority to perform the Work in the jurisdiction where the Project is located. Each copy of the Bid shall be signed by the person or persons legally authorized to bind the Bidder to a contract. A Bid by a corporation shall further name the state of incorporation and have the corporate seal affixed. A Bid submitted by an agent shall have a current power of attorney attached, certifying the agent's authority to bind the Bidder.

§ 4.1.8 A Bidder shall incur all costs associated with the preparation of its Bid.

§ 4.2 Bid Security

§ 4.2.1 Each Bid shall be accompanied by the following bid security if so required in the Bidding Documents:
(Insert the form and amount of bid security.)

«The Bidder shall provide a Bid Security in the form of a cashier's check drawn on a bank registered to do business in the State of Alabama and which is a member of the Federal Deposit Insurance Corporation, or a Bid Bond. Bid Security is required for bids exceeding $10,000.00. Bid Security shall be in the amount of 5% of the TOTAL BID, but in no event more than $10,000.00.»

§ 4.2.2 The Bidder pledges to enter into a Contract with the Owner on the terms stated in the Bid and shall, if required, furnish bonds covering the faithful performance of the Contract and payment of all obligations arising thereunder. Should the Bidder refuse to enter into such Contract or fail to furnish such bonds if required, the amount of the bid security shall be forfeited to the Owner as liquidated damages, not as a penalty.

§ 4.2.3 If a surety bond is required as bid security, it shall be written on AIA Document A310™, Bid Bond, unless otherwise provided in the Bidding Documents. The attorney-in-fact who executes the bond on behalf of the surety shall affix to the bond a certified and current copy of an acceptable power of attorney. The Bidder shall provide surety bonds from a company or companies lawfully authorized to issue surety bonds in the jurisdiction where the Project is located.

§ 4.2.4 The Owner will have the right to retain the bid security of Bidders to whom an award is being considered until (a) the Contract has been executed and bonds, if required, have been furnished; (b) the specified time has elapsed so that Bids may be withdrawn; or (c) all Bids have been rejected.

§ 4.2.5 Bonds must be issued by a Surety authorized to do business in the State of Alabama. A Performance Bond and a Labor and Material Payment Bond are required for projects exceeding $10,000.00. If the project cost is $50,000.00 or more, the Surety must have a minimum rating of A/Class VI as reported by the latest issue of Best's Key Rating Guide Property-Casualty published by Alfred M. Best Company, Inc.

§ 4.3 Submission of Bids

§ 4.3.1 A Bidder shall submit its Bid as indicated below:
(Indicate how, such as by website, host site/platform, paper copy, or other method Bidders shall submit their Bid.)

«Submission of Bid shall be as stated in Section 00100, Invitation to Bid, Paragraph 9, titled "Bid Submittal".»

§ 4.3.3 Bids shall be submitted by the date and time and at the place indicated in the invitation to bid. Bids submitted after the date and time for receipt of Bids, or at an incorrect place, will not be accepted and will be returned unopened.

§ 4.3.4 The Bidder shall assume full responsibility for timely delivery at the location designated for receipt of Bids.

AIA Document A701™ – 2018. Copyright © 1970, 1974, 1978, 1987, 1997 and 2018 by The American Institute of Architects. All rights reserved. The "American Institute of Architects," "AIA," the AIA Logo, and "AIA Contract Documents" are registered trademarks and may not be used without permission. This draft was produced by AIA software at 16:08:12 ET on 05/27/2020 under Order No.1224073061 which expires on 08/28/2020, is not for resale, is licensed for one-time use only, and may only be used in accordance with the AIA Contract Documents® Terms of Service. To report copyright violations, e-mail copyright@aia.org.
User Notes: (1364603258)

§ 4.3.5 A Bid submitted by any method other than as provided in this Section 4.3 will not be accepted.

§ 4.4 Modification or Withdrawal of Bid

§ 4.4.1 Prior to the date and time designated for receipt of Bids, a Bidder may submit a new Bid to replace a Bid previously submitted, or withdraw its Bid entirely, by notice to the party designated to receive the Bids. Such notice shall be received and duly recorded by the receiving party on or before the date and time set for receipt of Bids. The receiving party shall verify that replaced or withdrawn Bids are removed from the other submitted Bids and not considered. Notice of submission of a replacement Bid or withdrawal of a Bid shall be worded so as not to reveal the amount of the original Bid.

§ 4.4.2 Withdrawn Bids may be resubmitted up to the date and time designated for the receipt of Bids in the same format as that established in Section 4.3, provided they fully conform with these Instructions to Bidders. Bid security, if required, shall be in an amount sufficient for the Bid as resubmitted.

ARTICLE 5 CONSIDERATION OF BIDS

§ 5.1 Opening of Bids

If stipulated in an advertisement or invitation to bid, or when otherwise required by law, Bids properly identified and received within the specified time limits will be publicly opened and read aloud. A summary of the Bids may be made available to Bidders.

§ 5.2 Rejection of Bids

Unless otherwise prohibited by law, the Owner shall have the right to reject any or all Bids.

§ 5.3 Acceptance of Bid (Award)

§ 5.3.1 It is the intent of the Owner to award a Contract to the lowest responsive and responsible Bidder, provided the Bid has been submitted in accordance with the requirements of the Bidding Documents and does not exceed the funds available. Unless otherwise prohibited by law, the Owner shall have the right to waive informalities and irregularities in a Bid received and to accept the Bid which, in the Owner's judgment, is in the Owner's best interests.

§ 5.3.2 The Owner shall accept Alternates in the order listed on the Bid Form to determine the lowest responsive and responsible Bidder on the basis of the sum of the Base Bid and Alternates accepted.

ARTICLE 6 POST-BID INFORMATION

§ 6.1 Contractor's Qualification Statement

Bidders to whom award of a Contract is under consideration shall submit to the Architect, upon request and within the timeframe specified by the Architect, a properly executed AIA Document A305™, Contractor's Qualification Statement, unless such a Statement has been previously required and submitted for this Bid.

§ 6.3 Submittals

§ 6.3.1 After notification of selection for the award of the Contract, the Bidder shall, within three (3) calendar days or as stipulated in the Bidding Documents, submit in writing to the Owner through the Architect:

- **.1** a designation of the Work to be performed with the Bidder's own forces;
- **.2** names of the principal products and systems proposed for the Work and the manufacturers and suppliers of each; and
- **.3** names of persons or entities (including those who are to furnish materials or equipment fabricated to a special design) proposed for the principal portions of the Work.
- **.4** The name of the Project Superintendent and Project Manager together with the resume of qualifications of each;
- **.5** Nonresident Contractor shall submit a letter from an attorney as required by Subparagraph 11.1.2 below and;
- **.6** Engineering Firm or Testing Laboratory for testing as specified.

§ 6.3.2 The Bidder will be required to establish to the satisfaction of the Architect and Owner the reliability and responsibility of the persons or entities proposed to furnish and perform the Work described in the Bidding Documents.

AIA Document A701™ – 2018. Copyright © 1970, 1974, 1978, 1987, 1997 and 2018 by The American Institute of Architects. All rights reserved. The "American Institute of Architects," "AIA," the AIA Logo, and "AIA Contract Documents" are registered trademarks and may not be used without permission. This draft was produced by AIA software at 16:08:12 ET on 05/27/2020 under Order No.1224073061 which expires on 08/28/2020, is not for resale, is licensed for one-time use only, and may only be used in accordance with the AIA Contract Documents® Terms of Service. To report copyright violations, e-mail copyright@aia.org.
User Notes: (1364603258)

§ 6.3.3 Prior to the execution of the Contract, the Architect will notify the Bidder if either the Owner or Architect, after due investigation, has reasonable objection to a person or entity proposed by the Bidder. If the Owner or Architect has reasonable objection to a proposed person or entity, the Bidder may, at the Bidder's option, withdraw the Bid or submit an acceptable substitute person or entity. The Bidder may also submit any required adjustment in the Base Bid or Alternate Bid to account for the difference in cost occasioned by such substitution. The Owner may accept the adjusted bid price or disqualify the Bidder. In the event of either withdrawal or disqualification, bid security will not be forfeited.

§ 6.3.4 Persons and entities proposed by the Bidder and to whom the Owner and Architect have made no reasonable objection must be used on the Work for which they were proposed and shall not be changed except with the written consent of the Owner and Architect.

§ 6.3.5 The Contractor shall, within ten (10) calendar days of receiving Contract Forms for signature, furnish to the Owner the following items, along with the signed contract, or the Bid Security will be forfeited automatically without further delay:

.1 A Signed Construction Contract;
.2 Performance Bond and Labor and Material Payment Bond (originals) on all Bids over $10,000.00;
.3 Certificate of Insurance and copy of Builder's Risk Policy (original), as identified in the specifications;
.4 Schedule of Values; and
.5 Federal Immigration Law Compliance: E-Verify enrollment documentation.

§ 6.3.6 The Bid Check or Bond of the three (3) lowest Bidders will not be returned until after the Construction Contract is executed.

ARTICLE 7 PERFORMANCE BOND AND PAYMENT BOND

§ 7.1 Bond Requirements

§ 7.1.1 If stipulated in the Bidding Documents, the Bidder shall furnish bonds covering the faithful performance of the Contract and payment of all obligations arising thereunder.

§ 7.1.2 If the furnishing of such bonds is stipulated in the Bidding Documents, the cost shall be included in the Bid. If the furnishing of such bonds is required after receipt of bids and before execution of the Contract, the cost of such bonds shall be added to the Bid in determining the Contract Sum.

§ 7.1.3 The Bidder shall provide surety bonds from a company or companies lawfully authorized to issue surety bonds in the jurisdiction where the Project is located.

§ 7.1.4 Unless otherwise indicated below, the Penal Sum of the Payment and Performance Bonds shall be the amount of the Contract Sum.

§ 7.1.4 A Surety authorized to do business in the State of Alabama shall issue Performance Bond and Labor and Material Payment Bond, as required by the Contract Documents. If the project cost is $50,000.00 or more, the Surety must have a minimum rating of A/Class VI as reported by the latest issue of Best's Key Rating Guide Property-Casualty, published by Alfred M. Best Company, Inc.

§ 7.2 Time of Delivery and Form of Bonds

§ 7.2.1 The Bidder shall deliver the required bonds to the Owner not later than ten (10) calendar days from receiving the Construction Contract forms for signature.

§ 7.2.2 The bonds shall be written on City's Performance Bond and Labor and Material Payment Bond forms.

§ 7.2.3 The bonds shall be dated on or after the date of the Contract.

§ 7.2.4 The Bidder shall require the attorney-in-fact who executes the required bonds on behalf of the surety to affix to the bond a certified and current copy of the power of attorney.

AIA Document A701™ – 2018. Copyright © 1970, 1974, 1978, 1987, 1997 and 2018 by The American Institute of Architects. All rights reserved. The "American Institute of Architects," "AIA," the AIA Logo, and "AIA Contract Documents" are registered trademarks and may not be used without permission. This draft was produced by AIA software at 16:08:12 ET on 05/27/2020 under Order No.1224073061 which expires on 08/28/2020, is not for resale, is licensed for one-time use only, and may only be used in accordance with the AIA Contract Documents® Terms of Service. To report copyright violations, e-mail copyright@aia.org.
User Notes: (1364603258)

ARTICLE 8 FORM OF AGREEMENT BETWEEN OWNER AND CONTRACTOR

Unless otherwise required in the Bidding Documents, the Agreement for the Work will be written on AIA Document A101, Standard Form of Agreement Between Owner and Contractor Where the Basis of Payment Is a Stipulated Sum.

§ 8.1.1 AIA Document A101, Standard Form of Agreement Between Owner and Contractor where the Basis of Payment is a stipulated sum will be edited electronically and include the standard signatures as required by the City of Mobile.

ARTICLE 9 NONDISCRIMINATION

§9.1.1 Contractor shall comply with all Federal, State and local laws concerning nondiscrimination, including but not limited to City of Mobile Ordinance No. 14-034 which requires, *inter alia*, that all contractors performing work for the City of Mobile not discriminate on the basis of race, creed, color, national origin or disability, require that all subcontractors they engage do the same, and make every reasonable effort to assure that fifteen percent of the work performed under contract be awarded to socially and economically disadvantaged individuals and business entities. Contractor shall provide a completed copy of the City of Mobile Subcontracting and Major Supplier Plan with the Bid Form, for bids of $250,000.00 or greater.

ARTICLE 10 USE OF DOMESTIC PRODUCTS

§ 10.1.1 Section 39-3-1 Code of Alabama provides that the Contractor agrees, in the execution of this contract, to use material supplies and products manufactured, mined, processed or otherwise produced in the United States or its territories, if available at reasonable prices, and that breach of this agreement by the Contractor shall result in the assessment of liquidated damages in an amount not less than $500 nor more than 20 percent of the gross amount of the contract price.

§ 10.1.2 Section 39-3-4, Code of Alabama provides that the Contractor for a municipal construction project, financed by the State of Alabama or any political subdivision thereof, is required to use steel produced within the United States. If the Contractor violates the requirement to use domestic steel, this contract will automatically be revoked and the contractor shall not be entitled to any set-off or recoupment for labor or materials used up to the time of revocation.

ARTICLE 11 PREFERENCE TO RESIDENT CONTRACTORS

§ 11.1.1 Except for contracts funded in whole or in part with funds received from a federal agency, preference shall be given to Alabama resident contractors, and a nonresident bidder domiciled in a state having laws granting preference to local contactors shall be awarded the contracts only on the same basis as a the nonresident bidder's state awards contracts to Alabama contractors bidding under similar circumstances. In the letting of public contracts in which any state, county or municipal funds are utilized, resident contractors in Alabama, be they corporations, individuals or partnerships, are to be granted preference over nonresidents in awarding of contracts in the same manner and to the same extent as provided by the laws of the state of domicile of the nonresident.

§ 11.1.2 A successful nonresident bidder shall include in his post bid submittals a written opinion of an attorney at law licensed to practice law in such nonresident bidders' state of domicile, as to the preferences, if any or none, granted by the law of that state to its own business entities whose principal places of business are in that state in the letting of any or all public contracts.

ARTICLE 12 PRE-BID REQUIREMENTS

§ 12.1 STATE OF ALABAMA CONTRACTORS LICENSE

§ 12.1.1 If the Project total bid amount is $50,000 or more, a license issued by the State of Alabama Licensing Board for General Contractors is required prior to submitting a bid and the licensed classification and bid limits must cover the type of work in this project. See Invitation to Bid, Section 6 "Bidder Qualifications".

§ 12.2 A NONRESIDENT BIDDER

§ 12.2.1 Every bidder shall be registered with the Department of Revenue and with the Alabama Secretary of the State prior to bidding. The Secretary of State's "Business Entity ID" registration number shall be included on the bid form.

ARTICLE 13 POST-BID REQUIREMENTS

§ 13.1 CITY CONTRACTOR'S LICENSE

13.1.1 A City of Mobile Contractors License is required and must be current before the Contractor signs the Contract. Contractor must qualify and post $10,000.00 Surety Bond with the Land Use/Code Administration Department before a Contractors License will be issued by the Revenue Department. Information on the City Contractors License may be obtained by writing or calling:

AIA Document A701™ – 2018. Copyright © 1970, 1974, 1978, 1987, 1997 and 2018 by The American Institute of Architects. All rights reserved. The "American Institute of Architects," "AIA," the AIA Logo, and "AIA Contract Documents" are registered trademarks and may not be used without permission. This draft was produced by AIA software at 16:08:12 ET on 05/27/2020 under Order No.1224073061 which expires on 08/28/2020, is not for resale, is licensed for one-time use only, and may only be used in accordance with the AIA Contract Documents® Terms of Service. To report copyright violations, e-mail copyright@aia.org.
User Notes: (1364603258)

Land Use/Code Administration
P. O. Box 1827
Mobile, Alabama 36633-1827
Phone: 251.208.7421

Revenue Department
P. O. Box 1827
Mobile, Alabama 36633-1827
251.208.7461

13.2 E-VERIFY DOCUMENTATION

§ 13.2.1 The Contractor agrees that it shall comply with all of the requirements of the State of Alabama Immigration Law (Act. No. 2011-535 as amended by Act. No. 2012-491, Alabama Code (1975) Section 31-13-1, et. Seq., See Section 31-13-9), and the provisions of said Law, including all penalties for violation thereof, are incorporated therein.

13.3 PUBLIC CONTRACTS WITH ENTITIES ENGAGING IN CERTAIN BOYCOTT ACTIVITIES

§ 13.3 The Contractor represents and agrees that it is not currently engaged in, nor will engage in, any boycott of a person or entity based in or doing business with a jurisdiction with which the State of Alabama can enjoy open trade.

DRAFT

AIA Document A701™ – 2018. Copyright © 1970, 1974, 1978, 1987, 1997 and 2018 by The American Institute of Architects. All rights reserved. The "American Institute of Architects," "AIA," the AIA Logo, and "AIA Contract Documents" are registered trademarks and may not be used without permission. This draft was produced by AIA software at 16:08:12 ET on 05/27/2020 under Order No.1224073061 which expires on 08/28/2020, is not for resale, is licensed for one-time use only, and may only be used in accordance with the AIA Contract Documents® Terms of Service. To report copyright violations, e-mail copyright@aia.org.
User Notes: (1364603258)

SECTION 00300

SUPPLEMENTARY INSTRUCTIONS TO BIDDERS

THE ATTENTION OF ALL BIDDERS IS CALLED TO THE FOLLOWING INSTRUCTIONS AND CONDITIONS:

1. BIDDING DOCUMENTS:

A. Bidders may obtain complete sets of Bid Documents and Specifications (Project Manual) from WAS Design Inc. as listed in the Invitation to Bid.

B. Bidders shall use the complete set of documents in preparing their bid. The City of Mobile assumes no responsibility for errors or misinterpretations resulting from use of an incomplete set of documents.

Bidders shall use the complete set of documents in preparing their bid. Neither the City of Mobile nor the Engineer (Architect) assume responsibility for errors or misinterpretations resulting from use of an incomplete set of documents.

2. INTERPRETATION OF BID DOCUMENTS:

A. Bidders shall carefully study and compare the Bidding Documents and compare various components of the Bidding Documents with each other, shall examine the site and local conditions and shall at once report to the Project Manager any errors, inconsistencies or ambiguities discovered.

B. Bidders requiring clarification or interpretation of the Bidding Documents shall make a written request to the Project Manager by 3:00 PM at least five (5) calendar days prior to the date for receipt of Bids. E-mail requests are required and should be addressed to ctoland@was-design.com

C. Interpretations, corrections and changes to the Bidding Documents will be made by a formal, written Addendum. Interpretations, corrections and changes to the Bidding Documents made in any other manner will not be binding, and Bidders shall not rely on them.

D. Any discrepancy not resolved prior to Bidding shall be bid by the Contractor to provide for the most costly and/or restrictive interpretation of the documents.

3. BIDDING PROCEDURES:

A. No Bid will be considered unless made out and submitted on a copy of the Bid Form as set forth by the Bid Documents.

B. All blanks on the Bid Form shall be legibly executed in a non-erasable medium.

C. Sums shall be expressed in both words and figures. In case of discrepancy, the amount written in words shall govern.

D. Interlineations, alterations and erasures must be initialed by the signer of the Bid.

E. All requested Alternates, Unit Prices and Allowances shall be bid as indicated on the Bid Form and the Bid Documents.

F. Addenda shall be considered as a part of the Bid Documents and those issued prior to the opening of Bids shall be acknowledged on the Bid Form and any adjustment in cost shall be included in the Contract Sum.

4. BID SECURITY:

A. A Cashier's Check drawn on an Alabama bank or Bid Bond payable to Owner, City of Mobile, in the amount of 5% of the Base Bid, but in no event more than $10,000.00, must accompany bid. By submitting a Bid Security, the Bidder pledges to enter into a Contract with the City of Mobile on the terms stated in the Bid, and will, if required, furnish bonds covering faithful performance of the Contract and required insurance certificate. Should the Bidder refuse to enter into such Contract or fail to furnish such bonds or insurance or any other required document, the amount of the Bid security shall be forfeited to the Owner as liquidated damages, not as a penalty.

B. Bid Bond shall be valid for a minimum of sixty (60) days from the date of the Bid. The Owner reserves the right to retain the security of all Bidders until the successful Bidder enters into the Contract or until (60) days after Bid opening, whichever is sooner.

C. Bonds must be issued by a Surety licensed to do business in the State of Alabama. If the project cost is more than $50,000.00 the Surety must have a minimum rating of A/Class VI as reported by the latest issue of Best's Key Rating Guide Property-Casualty published by Alfred M. Best Company, Inc.

D. Power of Attorney is required for all Bonds.

E. The Surety company shall be required to execute AIA Document G-707, "Consent of Surety to Final Payment" prior to Final Payment of retainage being made to the Contractor.

5. EXAMINATION OF DOCUMENTS AND SITE WORK:

A. Before submitting a Bid, Bidders should carefully examine the Bid Documents, visit the site of the Work, including attendance at the MANDATORY Pre-Bid conference, fully inform themselves as to existing conditions and limitations, and include in the Bid a sum to cover the cost of all items included in the Contract and necessary to perform the Work. The submission of a Bid will be considered as conclusive evidence that the Bidder has made such examination.

6. SUBMISSION OF BIDS:

A. Bid, with Bid Security, Sales Tax Form C-3A, City of Mobile Subcontracting & Major Supplier Plan and other supporting data specified, shall be contained in a sealed, opaque envelope, approximately 9x12 inches or larger and be marked on the outside with the words "SEALED BID FOR LAVRETTA PARK

PICKLEBALL COURTS - PROJECT NUMBER: PR-073-22", and or "SEALED BID FOR HILLSDALE PARK – PICKLEBALL COURTS - PROJECT NUMBER: PR-041-22" the Bid Date, and Contractor's name, address, and City of Mobile Business License number. And, if bidding in an amount $50,000 or greater, the State of Alabama General Contractor's License number and classification of the Bidder issued by the State of Alabama Licensing Board for General Contractors shall be written on the envelope.

B. In addition, in large letters on both front and back of envelope, write the following: **DO NOT OPEN UNTIL TWO-THIRTY PM, NOVEMBER 8, 2023.**

C. Bids shall be deposited at the designated location prior to the time and date for receipt of Bids. Bids received after the time and date specified in the Invitation to Bid, or as modified by Addendum, will not be considered. Late Bids will be returned to the Bidder unopened.

D. The Bidder shall assume full responsibility for timely delivery at the location designated for receipt of Bids.

E. Oral, telephonic, facsimile or other electronically transmitted bids will not be considered.

7. MODIFICATION OR WITHDRAWAL OF BIDS:

A. A Bid may not be modified, withdrawn, or canceled by the Bidder for a period of sixty (60) days following the time and date designated for receipt of bids, and each Bidder so agrees in submitting a Bid.

8. CONSIDERATION AND AWARD OF BIDS:

A. At the discretion of the City, the properly identified Bids received on time will be publicly opened and will be read aloud.

B. The City shall have the right to reject any and all Bids. A Bid not accompanied by a required Bid security or a Bid which is in any way incomplete or irregular is subject to rejection.

C. It is the intent of the City to award a Contract to the lowest qualified Bidder provided the Bid has been submitted in accordance with the requirements of the Bidding Documents and does not exceed the funds available. The City shall have the right to waive informalities and irregularities in a Bid received and to accept the Bid which, in the City's judgment, is in the City's best interest.

D. The award shall be based on the lowest Total Bid for the Base Bid and any allowances, plus any alternates and/or options that may be accepted, as listed on the Bid Form.

9. PROOF OF COMPETENCY OF BIDDER:

A. Bidders may be required to furnish evidence satisfactory to the City of Mobile that they have sufficient means and experience in the types of work called for to assure the completion of the Contract in a satisfactory manner.

10. SIGNING OF CONTRACT:

A. The Standard Agreement between the City of Mobile and the Contractor, included herein, shall serve as the Agreement between the City and the Contractor.

B. The Bidder to whom the Contract is awarded shall, within ten (10) calendar days of receiving the Contract Forms, properly execute and deliver to the Owner, the following items with the signed Agreement:
(1). Performance Bond and Labor and Material Payment Bond (originals);
(2). Certificate of Insurance (original) with endorsements to City of Mobile;
(3). Evidence of enrollment in the E-Verify program.
(4). Other documentation as required by the Contract Documents.

C. Failure or refusal to sign the Agreement or to provide Certificates of Insurance in a form satisfactory to the City of Mobile, E-Verify verification, or other required documentation, shall subject the Bidder to immediate forfeiture of Bid Security.

D. On all documents: City of Mobile Business License, the Alabama Secretary of State Business Identity, the Alabama Secretary of State Certificate of Authority (out of state contractors), E-verify documentation, and ACORD Insurance Form, the Contractor's name shall be EXACTLY the same.

11. NONDISCRIMINATION:

A. Contractor shall comply with all Federal, State and local laws concerning nondiscrimination, including but not limited to City of Mobile Ordinance No. 14-034 which requires, inter alia, that all contractors performing work for the City of Mobile not discriminate on the basis of race, creed, color, national origin or disability, require that all subcontractors they engage do the same, and make every reasonable effort to assure that fifteen percent of the work performed under contract be awarded to socially and economically disadvantaged individuals and business entities.

12. AMERICANS WITH DISABILITIES ACT (ADA):

A. Bidders shall comply with the provisions of the Americans with Disabilities Act (ADA) of 1990 which prohibits discrimination against individuals with disabilities.

13. USE OF DOMESTIC PRODUCTS:

A. Section 39-3-1, Alabama Code, 1975, provides that the Contractor agree, in the execution of this Contract, to use materials, supplies and products manufactured, mined, processed or otherwise produced in the United States or its territories, if available at reasonable prices, and that breach of this Agreement by the Contractor shall result in the assessment of liquidated

damages in an amount not less than $500.00 nor more than twenty (20) percent of gross amount of the Contract Price.

14. NON-RESIDENT (OUT OF STATE) CONTRACTORS:

A. Preference to Resident Contractors: Section 39-3-5, Code of Alabama, 1975, provides that a non-resident (out of State) bidder domiciled in a state which grants a preference to local Contractors is to be awarded a public contract on the same basis as the non-resident bidder's state awards contracts to Alabama bidders. Alabama bidders are given a preference to the same extent that a non-resident bidder receives a preference in his home state. A non-resident bidder must include with any written bid documents a written opinion of an attorney licensed to practice in the non-resident bidder's state declaring what preferences, if any, exists in the non-resident's state.

B. Certificate of Authority: All non-resident (out of State) corporations must register with the Secretary of State and obtain a Certificate of Authority before doing business in the State of Alabama. Out of state Bidders should register and secure the required Certificate before submitting a Bid. The account number shall be included on the Bid Form.

15. ALABAMA IMMIGRATION ACT:

A. The State of Alabama Immigration Law (Act No. 2011-535 as amended by Act No. 2012-491), requires that Contractors not violate federal immigration law or knowingly employ, hire for employment, or continue to employ an unauthorized alien within the State of Alabama. In addition, Contractors are required to enroll in the federal E-Verify program and submit verification of enrollment to the City of Mobile within ten (10) days of receiving the contract forms (see Section 00600).

16. CITY OF MOBILE BUSINESS LICENSE:

A. A City of Mobile Business License is required and must be current at time of contract award and throughout contract period.

17. CITY OF MOBILE CONTRACTOR'S BUSINESS LICENSE:

A. A City of Mobile Contractor's Business License is required and must be current at time of contract award and throughout contract period.

B. Contractor must qualify and post a $10,000 surety bond with the Land Use/Code Administration Department before a Contractor's Business License will be issued by the Revenue Department. Information on the City Contractor's License may be obtained by writing or calling:

Land Use/Code Administration
P.O. Box 1827
Mobile, Alabama 36633-1827

Revenue Department
P.O. Box 1827
Mobile, Alabama 36633-1827

Phone: 251-208-7421

Phone: 251-208-7461

18. CITY OF MOBILE BUILDING PERMIT:

A. If a City of Mobile Building Permit is required it shall be obtained from the Land Use/Code Administration Department, but at no cost to the Contractor.

B. Contractor is responsible for ensuring that all inspections are successfully performed in accordance with City of Mobile regulations.

19. CONSTRUCTION PROJECT SIGN

A. A Construction Project Sign, a drawing of which is provided in this Project Manual, will be required. Contractor shall provide proof of sign layout and verbiage for review and approval prior to fabrication. The location of sign at the site shall be approved by the City of Mobile prior to installation.

20. CONSTRUCTION SCHEDULE AND ACCESS:

A. The project shall be completed within one hundred and fifty (150) calendar days from the date indicated by the Notice to Proceed.

C. Lavretta Park and Hillsdale Park will remain in use throughout the Construction period and the Contractor is directed to coordinate all areas of work and scheduling of work with the Owner. Within five days of the bid opening, the Apparent Low Bidder Contractor shall meet with the Owner to discuss Owner scheduling and priorities. Apparent Low Bidder shall then provide a proposed schedule within 5 calendar days of the initial meeting for Owner review and approval.

C. Contractor shall have access to the park as approved by the Owner, but typically **Monday through Friday from 7:30 A.M. to 5:00 P.M.** Contractor is directed to coordinate all areas of work and scheduling with the Owner around the Owner's scheduling of the park. After hours and weekend work will require prior approval of the Park Staff and may require hiring of a guard at the contractor's expense.

D. The Contractor may be allowed additional construction days due to inclement conditions ("rain days") only as such are appropriately documented and are in excess of the NOAA/National Weather Service average (previous 5 years) for the given month. A "rain day" is defined as more than a "trace" (0.10") of rain falling within a given 24 hour period. The Contractor shall provide documentation and formally request any "rain days" they feel are legitimately due. Documentation shall be submitted to the Project Manager, in writing, within ten (10) calendar days of the rain event.

21. SITE CONSIDERATIONS:

A. It is the Contractor's responsibility to carefully remove and store any items not permanently installed within the work areas. It is recommended that the

Contractor photograph, videotape or in some manner document any features to be removed and their condition, prior to removal.

B. Noise and strong smells shall be isolated or kept to a minimum when adjacent portions of the site are occupied.

C. Contractor shall be responsible to leave the work area and adjacent site clear of equipment and debris, etc. at the end of each work day. All final cleaning is the responsibility of the Contractor and shall be executed prior to acceptance for reuse of any portion of the site.

D. A dumpster and lay down area for Contractor materials and staging may be located at the site and located per the direction of the Owner. The Contractor is responsible for the removal of the dumpster, any storage containers and any security fencing, temporary erosion control (BMPs), etc. as soon as practical after their use by the Contractor or the work is complete.

22. SALES AND USE TAX EXEMPTION:

A. As per the State of Alabama ACT 2013-205, the Alabama Department of Revenue (ADOR) has been granted the authority to issue a "Certificate of Exemption from Sales and Use Tax for Governmental Entities" on construction projects. Therefore, this project shall qualify for State of Alabama Sales and Use Tax Exemptions under this ACT. It is the responsibility of the Bidder to confirm the potential tax exempt status of their bid with the ADOR and include any such savings in their bid, as well as accounting for same on their bid form attachment Sales Tax Form C-3A.

B. The full text of ACT 2013-205 is available on the State of Alabama Building Commission web-site at www.bc.alabama.gov .

23. SUBMISSION OF LIEN WAIVERS AND DBE COMPLIANCE, UTILIZATION REPORTS:

A. At each monthly Application for Payment submitted to the owner, the Contractor shall provide completed "City of Mobile DBE Compliance, Utilization Reports" and lien waivers, including those from Subcontractors and material suppliers.

24. NOTICE OF COMPLETION:

A. For Contracts $50,000 or greater:
Contractor shall provide proof of publication of Advertisement of Completion for four consecutive weeks in a local newspaper, as required in the Title 39, Section 39-1-1, Subsection (f), of the Code of Alabama. This Advertisement shall not begin until the Project has been accepted by the City of Mobile.

B. Notice of Completion advertisement shall read as follows:

STATE OF ALABAMA

COUNTY OF MOBILE

NOTICE OF COMPLETION
In accordance with Chapter 1, Title 39, Code of Alabama, 1975, NOTICE IS HEREBY given that (COMPANY NAME) has completed the contract for Lavretta Park Pickleball Courts - PR-073-22, Mobile, Alabama 36608 and/or for Hillsdale Park – Pickleball Courts - PR-041-22, Mobile, Alabama 36608. All persons having any claims for labor, material or otherwise in connection with this project should immediately notify the Architectural Engineering Department, City of Mobile, P.O. Box 1827, Mobile, Alabama 36633-1827.

C. Advertisement shall not begin until the Project has been accepted by the City of Mobile as Substantially Complete.

25. CONTRACTOR WARRANTY AND CERTIFICATION:

A. Upon completion of the contract, the Contractor shall certify under oath that all bills have been paid in full.

B. Contractor shall provide a one year Labor and Materials Warranty on company letterhead in addition to other warranties required by the Bid Documents.

26. LIQUIDATED DAMAGES

A. A time charge equal to Two Hundred Fifty Dollars ($250.00) per calendar day will be made against the Contractor for the entire period that any part of the Work remains uncompleted, or any required closeout documents are not acceptably submitted, for more than thirty (30) calendar days after the time specified for the Substantial Completion for the Work, the amount of which shall be deducted by the owner, and shall be retained by the Owner out of monies otherwise due the Contractor in the final payment, not as a penalty, but as liquidated damages sustained.

END OF SECTION 00300

SECTION 00400
BID FORM

Copies of the following Bid Forms shall be used. Bids submitted on alternate forms may be rejected. Fill in all blank spaces with an appropriate entry. Bid Form must be signed by an officer of the company and notarized.

TO: City of Mobile, 205 Government St., P.O. Box 1827, Mobile, AL, 36633

REF: PROJECT NO.: PR-073-22
PROJECT NAME: Lavretta Park – Pickleball Courts
PROJECT LOCATION: 200 Parkway St W, Mobile, Alabama, 36608

In compliance with the Bid Documents and having carefully and thoroughly examined said documents for the subject Work prepared by the City of Mobile, Architectural Engineering Department and Consultant dated October 16, 2023; and all Addendum (a) Number(s) _____, dated _____, 2023 (CAUTION: before submitting any bid it is the Bidder's responsibility to check with the Architectural Engineering Department for all Addenda or special instructions that may impact the Bid) thereto, receipt of which is hereby acknowledged, the premises and all conditions affecting the Work prior to making this Proposal, the Undersigned Bidder, hereby

COMPANY NAME:_____

ADDRESS:_____**PHONE**_____

ALABAMA GENERAL CONTRACTOR LICENSE NO. _____

CITY OF MOBILE BUSINESS LICENSE NO._____

SECRETARY OF STATE OF ALABAMA BUSINESS IDENTITY NO._____

SECRETARY OF STATE OF ALABAMA ACCOUNT NO._____

(Note: Secretary of State Account Number shall be filled in only by non-resident bidders)

(Check one) [ ] (A Corporation) [ ] (A Partnership [ ] (An Individual Doing Business)

hereby proposes to furnish all labor, materials, tools, equipment, and supplies and to sustain all the expenses incurred in performing the Work on the above captioned Project in accordance with the terms of the Contract Documents, and all applicable laws and regulations for the sum listed below. The initial term of the Contract shall extend for one hundred-eighty (180) calendar days from the date of the Notice to Proceed.

Lavretta Park – Pickleball Courts
Mobile, Alabama 36608
PR-073-22

Base Bid: **$ _____ .00**

Contingency Allowance: **+$ 50,000.00**

Total Base Bid: **$ _____ .00**
(Fill in here and in Total Bid below)

TOTAL BASE BID: _____

_____ Dollars, (**$ _____ .00**)
(Amount in Words) (Amount in Figures)

Add Alternate #1: Furnish and install Musco lighting system including controller, fixtures, poles and all associated hardware.

_____ Dollars & No Cents **$ _____ .00**
Amount in Words Amount in #'s

UNIT PRICES

ITEM DESCRIPTION	UNIT	UNIT PRICE
1. 6" recycled concrete paving	S.F.	$_____
2. Centipede sod	S.Y.	$_____
3. 4" Fiber reinforced concrete paving	S.F.	$_____
4. 4' Galvanized chain link fence	L.F.	$_____
5. Crush and Run paving	S.F.	$_____
6. 8" Ribbon curb at parking	L.F.	$_____
7. Utility water Line	L.F.	$_____

BID SECURITY: The undersigned Bidder agrees that the attached Bid Security, as a Cashier's Check drawn on an Alabama bank or a Bid Bond, made payable to the City of Mobile, in the amount of 5% of the bid amount, but in no event more than $10,000, as the proper measure of liquidated damages which the City will sustain by the failure of the undersigned to execute the Contract. Said Bid Security shall become the property of the City of Mobile as liquidated damages as specified in the Contract Documents.

AMERICANS WITH DISABILITIES ACT (ADA): The undersigned Bidder agrees to fully comply with all requirements of the Americans with Disabilities Act of 1990 and the Amendment Act.

NONDISCRIMINATION: Contractor shall comply with all Federal, State and local laws concerning nondiscrimination, including but not limited to City of Mobile Ordinance No. 14-034 which requires, *inter alia*, that all contractors performing work for the City of Mobile not discriminate on the basis of race, creed, color, national origin or disability, require that all subcontractors they engage do the same, and make every reasonable effort to assure that fifteen percent of the work performed under contract be awarded to socially and economically disadvantaged individuals and business entities.

SIGNATURE: If the undersigned Bidder is incorporated, the entire legal title of the company followed by "a corporation" should be used. If Bidder is an individual, then that individual's full legal name followed by doing business as (d/b/a) and name of firm, if any, should be used. If Bidder is a partnership, then full name of each partner should be listed followed by "d/b/a" and name of firm, if any.

Ensure that name and exact arrangement thereof is the same on all forms submitted with this Bid. If a word is abbreviated in the official company name, such as "Co.", then use that abbreviation. If not abbreviated in the official name, spell out.

Bidder agrees not to revoke or withdraw this Bid until sixty (60) calendar days following the time and date for receipt of bids. If notified in writing of the acceptance of this Bid within this time period, Bidder agrees to execute a Contract based on this Bid on the proscribed form within seven (7) calendar days of said notification and to furnish Performance Bond and Materials and Payment Bond as specified.

COMPANY NAME:_____
(Printed or Typed)

BY:_____
(Signature of Company Officer)

COMPANY OFFICER:_____
(Printed or Typed)

TITLE_____ **DATE**_____**, 2023**
(Printed or Typed)

Sworn to and subscribed before me this _____ day of _____2023

_____
Notary Public

Attachments:
1. Bid Security, with Power of Attorney
2. Secretary of State Authorization (Out of state bidders only)
3. Sales Tax Form C-3A
4. Supplier Diversity Subcontracting & Major Supplier Plan

END OF BID FORM

ACCOUNTING OF SALES TAX
ATTACHMENT TO BID FORM SECTION 00400
SALES TAX FORM C-3A

To: City of Mobile **Date:**_____

Name of Project: Lavretta Park – Pickleball Courts
Project Number: PR-073-22

SALES TAX ACCOUNTING

Pursuant to Act 2013-205, Section 1(g) the Contractor accounts for the sales tax NOT included in the bid proposal form as follows:

	ESTIMATED SALES TAX AMOUNT
BASE BID:	$_____
ADD ALT. #1:	$_____

Failure to provide an accounting of sales tax shall render the bid non-responsive. Other than determining responsiveness, sales tax accounting shall not affect the bid pricing nor be considered in the determination of the lowest responsible and responsive bidder.

Legal Name of Bidder_____

Mailing Address_____

***By (Legal Signature)**_____

*Name (type or print)_____ (Seal)

*Title_____

Telephone Number_____

OFFICE OF SUPPLIER DIVERSITY

CITY OF MOBILE

Subcontracting and Major Supplier Plan

Contact Office of Supplier Diversity for questions on completing this form.
Via emai:Archnique.kidd@cityofmobile.org
251.208.7967
205 Government Street, 5th Floor

Bidders and Proposers – Please complete and submit these forms as required by your City of Mobile Bid or Proposal Specification.

If you are submitting a proposal in response to a Request for Qualifications, Request for Proposal, or other solicitation ("Solicitations") issued by the City of Mobile, the bid specification may require you to utilize disadvantaged business enterprise ("DBE") subcontractors and suppliers. If DBE participation is required, you must complete and submit these forms with your proposal. If required, failure to submit this form will render your bid non-responsive. NOTE: To satisfy participation requirements for a federally funded project, you must utilize DBEs certified through the Alabama Unified Certification Program.

If DBE participation is required, and you fail to satisfy the participation requirement, you must show that you made a good faith effort to include such participation; you will be required to submit DBE Compliance Form 2 and include additional information if needed. When so required, failure to address adequately the good faith effort factors on Form 2 will render your bid or proposal non-responsive. The "good faith effort" factors on Form 2 are not intended to be a mandatory, exhaustive, or exclusive.

You are encouraged to work with the City of Mobile Supplier Diversity Manager when preparing this form. Please consult with the City Supplier Diversity Manager for a list of eligible DBEs. The "good faith effort" factors on **Form 2** are not intended to be mandatory, exhaustive, or exclusive; they are a tool to help you, and the City of Mobile, determine whether you made efforts which, by their scope, intensity, and appropriateness to the objective, would reasonably be expected to fulfill the participation requirement.

About **"DBEs"**: Disadvantaged business enterprise or DBE means a for-profit small business concern (1) That is at least 51 percent owned by one or more individuals who are both socially and economically disadvantaged or, in the case of a corporation, in which 51 percent of the stock is owned by one or more such individuals; and (2) whose management and daily business operations are controlled by one or more of the socially and economically disadvantaged individuals who own it.

About **"Good Faith" Effort**: Good faith efforts means efforts to achieve a DBE goal or other requirement of this part which, by their scope, intensity, and appropriateness to the objective, can reasonably be expected to fulfill the program requirement. The City of Mobile expects contractors holding large contracts to recruit and engage DBEs to be a part of their team.

Failure to submit this form, when so required by the bid or proposal specification, will render your bid non-responsive.

Contact Office of Supplier Diversity for questions on completing this form.
Via emai:Archnique.kidd@cityofmobile.org
251.208.7967
205 Government Street, 5th Floor

FORM 1: Background and Plan

Section I. Information about your company

Company	
Address	
Telephone	
E-Mail	

RFP/RFQ Solicitation Number	
Project Description	
Is your company a DBE company?	Yes ☐ No ☐
Work force demographics	Male _____ Female _____ Minority _____ Non-minority _____ SDVO _____ Total #of Employees _____

Subcontractor/Major Supplier Plan submitted by:

Printed Name: _____

Signature: _____Date: _____

Title: _____

The following employee will be designated as the **DBE Liaison** for all communication regarding DBE participation including documentation for DBE participation and maintenance of records of Good Faith Efforts for this contract award:

Name: _____Title: _____

Email: _____Phone: _____

Contact Office of Supplier Diversity for questions on completing this form.
Via emai:Archnique.kidd@cityofmobile.org
251.208.7967
205 Government Street, 5th Floor

FORM 1: Background and Plan (Cont'd

Section II. Subcontractors/Major Vendors Supplier Plan submitted by:

Please Print Company_____ Your Bid/Proposal Amount $_____ Date:

_____/ _____/_____ Description_____

Name of Bidder/Proposer: _____

I intend to use the following subcontractors: (Attach additional pages if necessary)

Subcontractor or Major Supplier	Phone	Scope of Work to be performed	$$ Value to be Performed	% Of Your Bid Amount	DBE?	Official Verification Only

Form 2: Good Faith Effort Documentation

Name of Bidder: _____

Contact Person: _____ Phone_____ Email_____

Please complete this form if you are unable to identify DBE subcontractors or suppliers to reach 15% of the value of your bid.

YES (□)	NO (□)	**Did you do these suggested areas for DBE recruitment and engagement**
		PRE-BID MEETING(S): The bidder attended all pre-bid meetings scheduled by the City to inform DBEs of contracting and subcontracting opportunities.
		CMDBE/ALDOT DBE LIST(S): The bidder utilized the Office of Supplier Diversity's list or lists of certified through the Alabama Department of Transportation UCP DBE Listing
		SMALL CONTRACT(S): The bidder selected specific portions of the work to be performed by DBEs in order to increase the likelihood of meeting the DBE goals (including breaking down contracts into smaller units to facilitate DBE participation). Consider support services, including insurance, accounting, temporary labor, and transportation, landscaping, and janitorial as potential areas for DBE use.
		FOLLOW-UP: The bidder followed-up initial indications of interest by DBEs by contacting those DBEs to determine with certainty if they remained interested in bidding.
		GOOD FAITH NEGOTIATIONS: The bidder negotiated in good faith with interested DBEs and did not reject DBEs as unqualified without sound business reasons based on a thorough investigation of their capabilities. Bidders are not expected to engage unqualified subcontractors or subcontractors whose pricing, after negotiation, remains excessive or unreasonable. (Please document qualification deficiencies or unreasonable pricing if it prevented your engagement of specific DBE subcontractors.)
		ADVERTISEMENT: The bidder advertised in general circulation and/or trade association publications concerning subcontracting opportunities and allowed DBEs reasonable time to respond.
		INTERNET ADVERTISING: The bidder advertised DBE and/or subcontracting opportunities in the newspaper or other internet portals that are accessible to DBEs and/or potential subcontractors.

		INFORMATION: The bidder provided interested DBEs with adequate information about the plans, specifications and requirements of the subcontract.
		WRITTEN NOTICE(S): The bidder/proposer took the necessary steps to provide written notice in a manner reasonably calculated to inform DBEs of subcontracting opportunities and allowed sufficient time for them to participate effectively.
		COMMUNITY RESOURCES: The bidder/proposer used the services of available community organizations, small and/or disadvantaged business assistance offices and other organizations that provided assistance in the recruitment and placement of DBE firms.

CONTRACT RECORDS:
The bidder/proposer has maintained the following records for each DBE that has bid on the subcontracting opportunity:
1. Name, address, email address and telephone number
2. A description of information provided by the bidder/proposer or subcontractor; and
3. A statement of whether an agreement was reached, and if not, why not, including any reasons for concluding that the DBE was unqualified to perform the job.

Section 2(B)

_____ There are not ways to break out 15% of the value of this contract for subcontractors / suppliers. Provide further detail in Section2(c) if the inability to break-out 15% of the value of the contract was the reason, or a reason, you could not meet the participation requirements.

_____ Could not find sufficient DBEs to provide subcontracting or supplier services.

_____ DBEs were available but did not have sufficient qualifications or experience to meet the needs of this contract.
Please indicate additional efforts you have taken to recruit and engage DBEs. _____
_____
_____

SECTION 00400
BID FORM

Copies of the following Bid Forms shall be used. Bids submitted on alternate forms may be rejected. Fill in all blank spaces with an appropriate entry. Bid Form must be signed by an officer of the company and notarized.

TO: City of Mobile, 205 Government St., P.O. Box 1827, Mobile, AL, 36633

REF: PROJECT NO.: PR-041-22
PROJECT NAME: Hillsdale Park – Pickleball Courts
PROJECT LOCATION: 558 East Felhorn Rd. Mobile, Alabama, 36608

In compliance with the Bid Documents and having carefully and thoroughly examined said documents for the subject Work prepared by the City of Mobile, Architectural Engineering Department and Consultant dated October 16, 2023; and all Addendum (a) Number(s) _____, dated _____, 2023 (CAUTION: before submitting any bid it is the Bidder's responsibility to check with the Architectural Engineering Department for all Addenda or special instructions that may impact the Bid) thereto, receipt of which is hereby acknowledged, the premises and all conditions affecting the Work prior to making this Proposal, the Undersigned Bidder, hereby

COMPANY NAME:_____

ADDRESS:_____**PHONE**_____

ALABAMA GENERAL CONTRACTOR LICENSE NO. _____

CITY OF MOBILE BUSINESS LICENSE NO._____

SECRETARY OF STATE OF ALABAMA BUSINESS IDENTITY NO._____

SECRETARY OF STATE OF ALABAMA ACCOUNT NO._____

(Note: Secretary of State Account Number shall be filled in only by non-resident bidders)

(Check one) [ ] (A Corporation) [ ] (A Partnership [ ] (An Individual Doing Business)

hereby proposes to furnish all labor, materials, tools, equipment, and supplies and to sustain all the expenses incurred in performing the Work on the above captioned Project in accordance with the terms of the Contract Documents, and all applicable laws and regulations for the sum listed below. The initial term of the Contract shall extend for one hundred-eighty (180) calendar days from the date of the Notice to Proceed.

Hillsdale Park – Pickleball Courts
Mobile, AL
PR-041-22

Base Bid: **$ _____ .00**

Contingency Allowance: **+$ 25,000.00**

Total Base Bid: **$ _____ .00**
(Fill in here and in Total Bid below)

TOTAL BASE BID: _____

_____ Dollars, (**$ _____ .00**)
(Amount in Words) (Amount in Figures)

Add Alternate #1: Furnish and install Musco lighting system including controller, fixtures, poles and all associated hardware.

_____ Dollars & No Cents **$ _____ .00**
Amount in Words Amount in #'s

UNIT PRICES

ITEM DESCRIPTION	UNIT	UNIT PRICE
1. 6" Asphalt paving	S.F.	$_____
2. Centipede sod	S.Y.	$_____
3. 4" Fiber reinforced concrete paving	S.F.	$_____
4. Utility water Line	L.F.	$_____

BID SECURITY: The undersigned Bidder agrees that the attached Bid Security, as a Cashier's Check drawn on an Alabama bank or a Bid Bond, made payable to the City of Mobile, in the amount of 5% of the bid amount, but in no event more than $10,000, as the proper measure of liquidated damages which the City will sustain by the failure of the undersigned to execute the Contract. Said Bid Security shall become the property of the City of Mobile as liquidated damages as specified in the Contract Documents.

AMERICANS WITH DISABILITIES ACT (ADA): The undersigned Bidder agrees to fully comply with all requirements of the Americans with Disabilities Act of 1990 and the Amendment Act.

NONDISCRIMINATION: Contractor shall comply with all Federal, State and local laws concerning nondiscrimination, including but not limited to City of Mobile Ordinance No. 14-034 which requires, *inter alia*, that all contractors performing work for the City of Mobile not discriminate on the basis of race, creed, color, national origin or disability, require that all subcontractors they engage do the same, and make every reasonable effort to assure that fifteen percent of the work performed under contract be awarded to socially and economically disadvantaged individuals and business entities.

SIGNATURE: If the undersigned Bidder is incorporated, the entire legal title of the company followed by "a corporation" should be used. If Bidder is an individual, then that individual's full legal name followed by doing business as (d/b/a) and name of firm, if

any, should be used. If Bidder is a partnership, then full name of each partner should be listed followed by "d/b/a" and name of firm, if any.

Ensure that name and exact arrangement thereof is the same on all forms submitted with this Bid. If a word is abbreviated in the official company name, such as "Co.", then use that abbreviation. If not abbreviated in the official name, spell out.

Bidder agrees not to revoke or withdraw this Bid until sixty (60) calendar days following the time and date for receipt of bids. If notified in writing of the acceptance of this Bid within this time period, Bidder agrees to execute a Contract based on this Bid on the proscribed form within seven (7) calendar days of said notification and to furnish Performance Bond and Materials and Payment Bond as specified.

COMPANY NAME:_____
(Printed or Typed)

BY:_____
(Signature of Company Officer)

COMPANY OFFICER:_____
(Printed or Typed)

TITLE_____ **DATE**_____**, 2023**
(Printed or Typed)

Sworn to and subscribed before me this _____ day of _____2023

_____
Notary Public

Attachments:
1. Bid Security, with Power of Attorney
2. Secretary of State Authorization (Out of state bidders only)
3. Sales Tax Form C-3A
4. Supplier Diversity Subcontracting & Major Supplier Plan

END OF BID FORM

ACCOUNTING OF SALES TAX
ATTACHMENT TO BID FORM SECTION 00400
SALES TAX FORM C-3A

To: City of Mobile **Date:**_____

Name of Project: Hillsdale Park – Pickleball Courts
Project Number: PR-041-22

SALES TAX ACCOUNTING

Pursuant to Act 2013-205, Section 1(g) the Contractor accounts for the sales tax NOT included in the bid proposal form as follows:

	ESTIMATED SALES TAX AMOUNT
BASE BID:	$_____
ADD ALT. #1:	$_____

Failure to provide an accounting of sales tax shall render the bid non-responsive. Other than determining responsiveness, sales tax accounting shall not affect the bid pricing nor be considered in the determination of the lowest responsible and responsive bidder.

Legal Name of Bidder_____

Mailing Address_____

***By (Legal Signature)**_____

*Name (type or print)_____ (Seal)

*Title_____

Telephone Number_____

OFFICE OF SUPPLIER DIVERSITY

CITY OF MOBILE

Subcontracting and Major Supplier Plan

Contact Office of Supplier Diversity for questions on completing this form.
Via emai:Archnique.kidd@cityofmobile.org
251.208.7967
205 Government Street, 5th Floor

Bidders and Proposers – Please complete and submit these forms as required by your City of Mobile Bid or Proposal Specification.

If you are submitting a proposal in response to a Request for Qualifications, Request for Proposal, or other solicitation ("Solicitations") issued by the City of Mobile, the bid specification may require you to utilize disadvantaged business enterprise ("DBE") subcontractors and suppliers. If DBE participation is required, you must complete and submit these forms with your proposal. If required, failure to submit this form will render your bid non-responsive. NOTE: To satisfy participation requirements for a federally funded project, you must utilize DBEs certified through the Alabama Unified Certification Program.

If DBE participation is required, and you fail to satisfy the participation requirement, you must show that you made a good faith effort to include such participation; you will be required to submit DBE Compliance Form 2 and include additional information if needed. When so required, failure to address adequately the good faith effort factors on Form 2 will render your bid or proposal non-responsive. The "good faith effort" factors on Form 2 are not intended to be a mandatory, exhaustive, or exclusive.

You are encouraged to work with the City of Mobile Supplier Diversity Manager when preparing this form. Please consult with the City Supplier Diversity Manager for a list of eligible DBEs. The "good faith effort" factors on **Form 2** are not intended to be mandatory, exhaustive, or exclusive; they are a tool to help you, and the City of Mobile, determine whether you made efforts which, by their scope, intensity, and appropriateness to the objective, would reasonably be expected to fulfill the participation requirement.

About **"DBEs"**: Disadvantaged business enterprise or DBE means a for-profit small business concern (1) That is at least 51 percent owned by one or more individuals who are both socially and economically disadvantaged or, in the case of a corporation, in which 51 percent of the stock is owned by one or more such individuals; and (2) whose management and daily business operations are controlled by one or more of the socially and economically disadvantaged individuals who own it.

About **"Good Faith" Effort**: Good faith efforts means efforts to achieve a DBE goal or other requirement of this part which, by their scope, intensity, and appropriateness to the objective, can reasonably be expected to fulfill the program requirement. The City of Mobile expects contractors holding large contracts to recruit and engage DBEs to be a part of their team.

Failure to submit this form, when so required by the bid or proposal specification, will render your bid non-responsive.

Contact Office of Supplier Diversity for questions on completing this form.
Via emai:Archnique.kidd@cityofmobile.org
251.208.7967
205 Government Street, 5th Floor

FORM 1: Background and Plan

Section I. Information about your company

Company	
Address	
Telephone	
E-Mail	

RFP/RFQ Solicitation Number	
Project Description	
Is your company a DBE company?	Yes ☐ No ☐
Work force demographics	Male _____ Female _____ Minority _____ Non-minority _____ SDVO _____ Total #of Employees _____

Subcontractor/Major Supplier Plan submitted by:

Printed Name: _____

Signature: _____Date: _____

Title: _____

The following employee will be designated as the **DBE Liaison** for all communication regarding DBE participation including documentation for DBE participation and maintenance of records of Good Faith Efforts for this contract award:

Name: _____Title: _____

Email: _____Phone: _____

Contact Office of Supplier Diversity for questions on completing this form.
Via emai:Archnique.kidd@cityofmobile.org
251.208.7967
205 Government Street, 5th Floor

FORM 1: Background and Plan (Cont'd

Section II. Subcontractors/Major Vendors Supplier Plan submitted by:

Please Print Company_____ Your Bid/Proposal Amount $_____ Date:

_____/ _____/_____ Description_____

Name of Bidder/Proposer: _____

I intend to use the following subcontractors: (Attach additional pages if necessary)

Subcontractor or Major Supplier	Phone	Scope of Work to be performed	$$ Value to be Performed	% Of Your Bid Amount	DBE?	Official Verification Only

Form 2: Good Faith Effort Documentation

Name of Bidder: _____

Contact Person: _____ Phone_____ Email_____

Please complete this form if you are unable to identify DBE subcontractors or suppliers to reach 15% of the value of your bid.

YES (□)	NO (□)	**Did you do these suggested areas for DBE recruitment and engagement**
		PRE-BID MEETING(S): The bidder attended all pre-bid meetings scheduled by the City to inform DBEs of contracting and subcontracting opportunities.
		CMDBE/ALDOT DBE LIST(S): The bidder utilized the Office of Supplier Diversity's list or lists of certified through the Alabama Department of Transportation UCP DBE Listing
		SMALL CONTRACT(S): The bidder selected specific portions of the work to be performed by DBEs in order to increase the likelihood of meeting the DBE goals (including breaking down contracts into smaller units to facilitate DBE participation). Consider support services, including insurance, accounting, temporary labor, and transportation, landscaping, and janitorial as potential areas for DBE use.
		FOLLOW-UP: The bidder followed-up initial indications of interest by DBEs by contacting those DBEs to determine with certainty if they remained interested in bidding.
		GOOD FAITH NEGOTIATIONS: The bidder negotiated in good faith with interested DBEs and did not reject DBEs as unqualified without sound business reasons based on a thorough investigation of their capabilities. Bidders are not expected to engage unqualified subcontractors or subcontractors whose pricing, after negotiation, remains excessive or unreasonable. (Please document qualification deficiencies or unreasonable pricing if it prevented your engagement of specific DBE subcontractors.)
		ADVERTISEMENT: The bidder advertised in general circulation and/or trade association publications concerning subcontracting opportunities and allowed DBEs reasonable time to respond.
		INTERNET ADVERTISING: The bidder advertised DBE and/or subcontracting opportunities in the newspaper or other internet portals that are accessible to DBEs and/or potential subcontractors.

		INFORMATION: The bidder provided interested DBEs with adequate information about the plans, specifications and requirements of the subcontract.
		WRITTEN NOTICE(S): The bidder/proposer took the necessary steps to provide written notice in a manner reasonably calculated to inform DBEs of subcontracting opportunities and allowed sufficient time for them to participate effectively.
		COMMUNITY RESOURCES: The bidder/proposer used the services of available community organizations, small and/or disadvantaged business assistance offices and other organizations that provided assistance in the recruitment and placement of DBE firms.

CONTRACT RECORDS:
The bidder/proposer has maintained the following records for each DBE that has bid on the subcontracting opportunity:
1. Name, address, email address and telephone number
2. A description of information provided by the bidder/proposer or subcontractor; and
3. A statement of whether an agreement was reached, and if not, why not, including any reasons for concluding that the DBE was unqualified to perform the job.

Section 2(B)

_____ There are not ways to break out 15% of the value of this contract for subcontractors / suppliers. Provide further detail in Section2(c) if the inability to break-out 15% of the value of the contract was the reason, or a reason, you could not meet the participation requirements.

_____ Could not find sufficient DBEs to provide subcontracting or supplier services.

_____ DBEs were available but did not have sufficient qualifications or experience to meet the needs of this contract.
Please indicate additional efforts you have taken to recruit and engage DBEs. _____
_____
_____

SECTION 00500

STANDARD FORM OF AGREEMENT BETWEEN OWNER AND CONTRACTOR

PART 1 GENERAL

A. This section includes the STANDARD FORM OF AGREEMENT BETWEEN OWNER and CONTRACTOR, AIA Document A101, wherein the basis of payment is a Stipulated Sum; the document has been electronically modified to meet the Owner's requirements and shall be used for the Project.

AIA® Document A101® – 2017

Standard Form of Agreement Between Owner and Contractor where the basis of payment is a Stipulated Sum

AGREEMENT made as of the day of in the year
(In words, indicate day, month and year.)

BETWEEN the Owner:
(Name, legal status, address and other information)

City of Mobile
P. O. Box 1827
Mobile, Alabama 36633-1827

and the Contractor:
(Name, legal status, address and other information)

.

City of Mobile Business License Number:
Secretary of State Registration Number:

for the following Project:
(Name, location and detailed description)

Lavretta Park – Pickleball Court
200 West Parkway Drive, Mobile, Alabama 36608
PR-073-22
and
Hillsdale Park – Pickleball Court
558 East Felhorn Road, Mobile, Alabama 36608
PR-041-22
The Architect:
(Name, legal status, address and other information)

Architectural Engineering Department
P. O. Box 1827
Mobile, Alabama 36633-1827

The Owner and Contractor agree as follows.

ADDITIONS AND DELETIONS:
The author of this document has added information needed for its completion. The author may also have revised the text of the original AIA standard form. An *Additions and Deletions Report* that notes added information as well as revisions to the standard form text is available from the author and should be reviewed. A vertical line in the left margin of this document indicates where the author has added necessary information and where the author has added to or deleted from the original AIA text.

This document has important legal consequences. Consultation with an attorney is encouraged with respect to its completion or modification.

The parties should complete A101®–2017, Exhibit A, Insurance and Bonds, contemporaneously with this Agreement. AIA Document A201®–2017, General Conditions of the Contract for Construction, is adopted in this document by reference. Do not use with other general conditions unless this document is modified.

AIA Document A101 – 2017. Copyright © 1915, 1918, 1925, 1937, 1951, 1958, 1961, 1963, 1967, 1974, 1977, 1987, 1991, 1997, 2007 and 2017. All rights reserved. "The American Institute of Architects," "American Institute of Architects," "AIA," the AIA Logo, and "AIA Contract Documents" are trademarks of The American Institute of Architects. This document was produced at 15:10:35 ET on 10/02/2023 under Order No.3104238820 which expires on 06/30/2024, is not for resale, is licensed for one-time use only, and may only be used in accordance with the AIA Contract Documents® Terms of Service. To report copyright violations, e-mail docinfo@aiacontracts.com.
User Notes:

TABLE OF ARTICLES

1 THE CONTRACT DOCUMENTS

2 THE WORK OF THIS CONTRACT

3 DATE OF COMMENCEMENT AND SUBSTANTIAL COMPLETION

4 CONTRACT SUM

5 PAYMENTS

6 DISPUTE RESOLUTION

7 TERMINATION OR SUSPENSION

8 MISCELLANEOUS PROVISIONS

9 ENUMERATION OF CONTRACT DOCUMENTS, INSURANCE AND BONDS

ARTICLE 1 THE CONTRACT DOCUMENTS

The Contract Documents consist of this Agreement, Conditions of the Contract (General, Supplementary, and other Conditions), Drawings, Specifications, Addenda issued prior to execution of this Agreement, other documents listed in this Agreement, and Modifications issued after execution of this Agreement, all of which form the Contract, and are as fully a part of the Contract as if attached to this Agreement or repeated herein. The Contract represents the entire and integrated agreement between the parties hereto and supersedes prior negotiations, representations, or agreements, either written or oral. An enumeration of the Contract Documents, other than a Modification, appears in Article 9.

ARTICLE 2 THE WORK OF THIS CONTRACT

The Contractor shall fully execute the Work described in the Contract Documents, except as specifically indicated in the Contract Documents to be the responsibility of others (See attachment Exhibit A).

ARTICLE 3 DATE OF COMMENCEMENT AND SUBSTANTIAL COMPLETION

§ 3.1 The date of commencement of the Work shall be:
(Check one of the following boxes.)

(Paragraph deleted)

[X] A date set forth in a notice to proceed issued by the Owner.

(Paragraphs deleted)

§ 3.2 The Contract Time shall be measured from the date of commencement of the Work.

§ 3.3 Substantial Completion

§ 3.3.1 Subject to adjustments of the Contract Time as provided in the Contract Documents, the Contractor shall achieve Substantial Completion of the entire Work:
(Check one of the following boxes and complete the necessary information.)

[X] Not later than one-hundred eighty (180) calendar days from the date of the Notice to Proceed for commencement of the Work.

(Table deleted)
(Paragraph deleted)

AIA Document A101 – 2017. Copyright © 1915, 1918, 1925, 1937, 1951, 1958, 1961, 1963, 1967, 1974, 1977, 1987, 1991, 1997, 2007 and 2017. All rights reserved. "The American Institute of Architects," "American Institute of Architects," "AIA," the AIA Logo, and "AIA Contract Documents" are trademarks of The American Institute of Architects. This document was produced at 15:10:35 ET on 10/02/2023 under Order No.3104238820 which expires on 06/30/2024, is not for resale, is licensed for one-time use only, and may only be used in accordance with the AIA Contract Documents® Terms of Service. To report copyright violations, e-mail docinfo@aiacontracts.com.
User Notes:

§ **3.3.3** If the Contractor fails to achieve Substantial Completion as provided in this Section 3.3, liquidated damages, if any, shall be assessed as set forth in Section 4.5.

ARTICLE 4 CONTRACT SUM

§ **4.1** The Owner shall pay the Contractor the Contract Sum in current funds for the Contractor's performance of the Contract. The Contract Sum shall be and 00/100 Dollars ($), subject to additions and deductions as provided in the Contract Documents.

Lavretta Park	
Base Bid:	$
Contingency Allowance:	$50,000.00
Total Bid:	$
Add. Alt. #1	$
Hillsdale Park	
Base Bid:	$
Contingency Allowance:	$25,000.00
Total Bid:	$
Add. Alt. #1	$

§ 4.2 Alternates

§ **4.2.1** Alternates, if any, included in the Contract Sum:

Item	Price
Add. Alt. #1	

(Table deleted)
(Paragraphs deleted)

§ **4.3** Allowances, if any, included in the Contract Sum:
(Identify each allowance.)

Lavretta Park Contingency Allowance: Fifty thousand and 00/100 Dollars ($50,000.00)
Hillsdale Park Contingency Allowance: Twenty-Five thousand and 00/100 Dollars ($25,000.00)

A. Contingency Allowance shall cover cost of material, labor, overhead, profit and other expenses for complete installation of items of additional work as required for a complete, functional project.
B. Contingency Allowance shall be used for unforeseen conditions not covered in the construction documents.
C. All extra work under this section must be authorized by the Owner, in writing, prior to materials or undertaking work.
D. Upon completion of the Work, the unused portion of the Allowance shall be credited back to the Owner in the form of a Change Order.
E. Allowances are subject to the same provision of AIA 201 Article 7.3.7.

§ **4.4** Unit prices, if any:
(Identify the item and state the unit price and quantity limitations, if any, to which the unit price will be applicable.)

Item	Units and Limitations	Price per Unit ($0.00)
Lavretta Park		
1. 6" recycled concrete paving	S.F.	
2. Centipede sod	S.Y.	
3. 4"Fiber reinforced concrete paving	S.F.	
4. 4' Galvanized chain link fence	L.F.	
5. Crush and Run paving	S.F	
6. 8" Ribbon curb at parking	L.F	
7. Utility water Line	L.F.	

AIA Document A101 – 2017. Copyright © 1915, 1918, 1925, 1937, 1951, 1958, 1961, 1963, 1967, 1974, 1977, 1987, 1991, 1997, 2007 and 2017. All rights reserved. "The American Institute of Architects," "American Institute of Architects," "AIA," the AIA Logo, and "AIA Contract Documents" are trademarks of The American Institute of Architects. This document was produced at 15:10:35 ET on 10/02/2023 under Order No.3104238820 which expires on 06/30/2024, is not for resale, is licensed for one-time use only, and may only be used in accordance with the AIA Contract Documents® Terms of Service. To report copyright violations, e-mail docinfo@aiacontracts.com.
User Notes:

Hillsdale Park

1. 6" Asphalt paving	S.F.
2. Centipede sod	S.Y.
3. 4" Fiber reinforced concrete paving	S.F.
4. Utility water Line	L.F.

§ 4.5 Liquidated damages:
(Insert terms and conditions for liquidated damages, if any.)

A time charge equal to Two Hundred Fifty and 00/100 Dollars ($250.00) per calendar day will be made against the Contractor for the entire period that any part of the Work remains uncompleted or any required closeouts documents are not acceptably submitted for more than thirty (30) days after the date specified for the substantial Completion of the Work, the amount of which shall be deducted by the owner, and shall be retained by the Owner out of monies otherwise due the Contractor in the final payment, not as a penalty, but as liquidated damages sustained.

(Paragraphs deleted)

ARTICLE 5 PAYMENTS

§ 5.1 Progress Payments

§ 5.1.1 Based upon Applications for Payment submitted to the Architect by the Contractor and Certificates for Payment issued by the Architect, the Owner shall make progress payments on account of the Contract Sum to the Contractor as provided below and elsewhere in the Contract Documents.

§ 5.1.2 The period covered by each Application for Payment shall be one calendar month ending on the 25th of the month.

§ 5.1.3 Provided that an Application for Payment in acceptable format is received by the Architect not later than the first 1st day of a month, the Owner shall make payment of the amount certified to the Contractor not later than the tenth 10th day of the following month. If an Application for Payment in acceptable format is received by the Architect after the application date fixed above, payment of the amount certified shall be made by the Owner not later than forty (40) days after the Architect receives the Application for Payment.
(Federal, state or local laws may require payment within a certain period of time.)

§ 5.1.4 Each Application for Payment shall be based on the most recent schedule of values submitted by the Contractor in accordance with the Contract Documents. The schedule of values shall allocate the entire Contract Sum among the various portions of the Work. The schedule of values shall be prepared in such form, and supported by such data to substantiate its accuracy, as the Architect may require. This accepted schedule of values shall be used as a basis for reviewing the Contractor's Applications for Payment.

§ 5.1.5 Applications for Payment shall show the percentage of completion of each portion of the Work as of the end of the period covered by the Application for Payment.

§ 5.1.6 In accordance with AIA Document A201, General Conditions of the Contract for Construction (including Owner's then-current modifications), and subject to other provisions of the Contract Documents, the amount of each progress payment shall be computed as follows:

§ 5.1.6.1 The amount of each progress payment shall first include:

- **.1** That portion of the Contract Sum properly allocable to completed Work;
- **.2** That portion of the Contract Sum properly allocable to materials and equipment delivered and suitably stored at the site for subsequent incorporation in the completed construction, or, if approved in advance by the Owner, suitably stored off the site at a location agreed upon in writing and insured as specified;

AIA Document A101 – 2017. Copyright © 1915, 1918, 1925, 1937, 1951, 1958, 1961, 1963, 1967, 1974, 1977, 1987, 1991, 1997, 2007 and 2017. All rights reserved. "The American Institute of Architects," "American Institute of Architects," "AIA," the AIA Logo, and "AIA Contract Documents" are trademarks of The American Institute of Architects. This document was produced at 15:10:35 ET on 10/02/2023 under Order No.3104238820 which expires on 06/30/2024, is not for resale, is licensed for one-time use only, and may only be used in accordance with the AIA Contract Documents® Terms of Service. To report copyright violations, e-mail docinfo@aiacontracts.com.
User Notes:

.3 Completed work shall be determined by multiplying the percentage completion of each portion of the Work by the share of the Contract Sum allocated to that portion of the Work in the schedule of values.

§ 5.1.6.2 The amount of each progress payment shall then be reduced by:

.1 The aggregate of any amounts previously paid by the Owner;

.2 The amount, if any, for Work that remains uncorrected and for which the Architect has previously withheld a Certificate for Payment as provided in Article 9 of AIA Document A201–2017;

.3 Any amount for which the Contractor does not intend to pay a Subcontractor or material supplier, unless the Work has been performed by others the Contractor intends to pay;

.4 For Work performed or defects discovered since the last payment application, any amount for which the Architect may withhold payment, or nullify a Certificate of Payment in whole or in part, as provided in Article 9 of AIA Document A201–2017; and

.5 Retainage withheld pursuant to Section 5.1.7.

§ 5.1.6.3 Any Progress Payment shall include partial release of liens for material and labor for previous application for payment amount approved and paid. The DBE Utilization Report shall be included with the pay application.

§ 5.1.7 Retainage

§ 5.1.7.1 For each progress payment made prior to Substantial Completion of the Work, the Owner may withhold the following amount, as retainage, from the payment otherwise due:

(Insert a percentage or amount to be withheld as retainage from each Application for Payment. The amount of retainage may be limited by governing law.)

Five percent (5%) of the first fifty percent (50%) of the completed work and after fifty percent (50%) completion has been accomplished, no further retainage shall be held from the original Contract Sum. Increases in the contract sum by Change Order shall also be subject to retainage.

§ 5.1.7.1.1 The following items are not subject to retainage:

(Insert any items not subject to the withholding of retainage, such as general conditions, insurance, etc.)

N/A

(Paragraphs deleted)

§ 5.1.7.3 Except as set forth in this Section 5.1.7.3, upon Substantial Completion of the Work, the Contractor may submit an Application for Payment that includes the retainage withheld from prior Applications for Payment pursuant to this Section 5.1.7. The Application for Payment submitted at Substantial Completion shall not include retainage as follows:

(Insert any other conditions for release of retainage upon Substantial Completion.)

The net amount of the Retainage shall be equal to two and one half percent (2.5%) of total Contract Sum, as increased or decreased by Change Order.

§ 5.1.8 If final completion of the Work is materially delayed through no fault of the Contractor, the Owner shall pay the Contractor any additional amounts in accordance with Article 9 of AIA Document A201.

§ 5.1.9 Except with the Owner's prior approval, the Contractor shall not make advance payments to suppliers for materials or equipment which have not been delivered and stored at the site.

§ 5.2 Final Payment

§ 5.2.1 Final monthly progress payment, constituting the entire unpaid balance of the Contract Sum, less retainage, shall be made by the Owner to the Contractor when

.1 the Contractor has fully performed the Contract except for the Contractor's responsibility to correct Work as provided in Article 12 of AIA Document A201 (including Owner's then-current modifications which may be obtained from the Owner or, alternatively, a copy of which is incorporated in the Project

AIA Document A101 – 2017. Copyright © 1915, 1918, 1925, 1937, 1951, 1958, 1961, 1963, 1967, 1974, 1977, 1987, 1991, 1997, 2007 and 2017. All rights reserved. "The American Institute of Architects," "American Institute of Architects," "AIA," the AIA Logo, and "AIA Contract Documents" are trademarks of The American Institute of Architects. This document was produced at 15:10:35 ET on 10/02/2023 under Order No.3104238820 which expires on 06/30/2024, is not for resale, is licensed for one-time use only, and may only be used in accordance with the AIA Contract Documents® Terms of Service. To report copyright violations, e-mail docinfo@aiacontracts.com.
User Notes:
(1718960944)

Manual and incorporated by reference herein as a part thereof), and to satisfy other requirements, if any, which extend beyond final payment; and

.2 a Certificate of Substantial Completion has been issued by the Architect/Owner and the project accepted.

§ 5.2.2 The Owner's final payment to the Contractor of retainage shall be made as follows:

The final two and one half percent (2.5%) of the total Contract Sum retained will not be paid until proof of publication is submitted and all written claims paid in full. Contractor to submit the following:

•Contractor's Affidavit of Payment of Debts and Claims (AIA form G706, included in contract documents) with

a.) Contractor's Release or Waiver of Liens

b.) Releases or Waivers of Liens from Subcontractors and Material and Equipment Suppliers;

•Contractor's Affidavit of Release of Liens (AIA form G706A, included in contract documents);

•Consent of Surety, if any, to final payment (AIA form G707, included in contract documents);

•Any additional close out requirements per the contract documents; and

•Notarized Affidavit of Notice of Completion advertisement from publisher.

Contractor shall provide proof of publication of Notice of Completion in a local newspaper once per week for four (4) consecutive weeks, as required in the Title 39, Section 39-1-1, Subsection (f), of the Code of Alabama quoted below. "The Contractor shall, immediately after the completion of the contract, give notice of Completion by an advertisement in a newspaper of general circulation published within the city or county in which the work has been done, for a period of four (4) consecutive weeks. A final settlement shall not be made upon the contract until the expiration of thirty (30) days after the completion of the notice. Proof of publication of the notice shall be made by the contractor to the authority by whom the contract was made by affidavit of the publisher and a printed copy of the notice published. If no newspaper is published in the county in which the work is done, the notice may be given by the contract." (Acts 1927, No. 39, 9.37; Acts 1935, No. 39, 9. 70; Code 1940, T. 50, Section 16; Acts 1983, No. 83-737, 9.1203; Acts 1989, No. 89-650m 9. 1284, Section 1; Acts 1994, No. 94-207, p, 270, Section 1; Acts 1997, No. 97-225, p. 348, Section 1.)

The Notice of Completion shall read as follows:

STATE OF ALABAMA
COUNTY OF MOBILE
NOTICE OF COMPLETION
In accordance with Chapter I, Title 39, Code of Alabama, 1975, NOTICE IS HEREBY given that (Contractor) has completed the contract for Lavretta Park – Pickleball Courts, 200 West Parkway Drive, Mobile, Alabama 36608, PR-073-22 and Hillsdale Park – 558 East Felhorn Road, Mobile, Alabama 36608, PR-041-22. All persons having any claims for labor, material or otherwise in connection with this project should immediately notify the Architectural Engineering Department, City of Mobile, P. O. Box 1827, Mobile, Alabama 36633-1827.

Publication of the Notice of Completion shall not begin until the Project has been accepted as Substantially Complete by the City of Mobile.

(Paragraphs deleted)

ARTICLE 6 DISPUTE RESOLUTION

§ 6.1 Initial Decision Maker

The Engineer will serve as the Initial Decision Maker pursuant to Article 15 of AIA Document A201, unless the parties appoint below another individual, not a party to this Agreement, to serve as the Initial Decision Maker. *(If the parties mutually agree, insert the name, address and other contact information of the Initial Decision Maker, if other than the Architect.)*

N/A

§ 6.2 Binding Dispute Resolution

For any Claim, the method of binding dispute resolution shall be as follows:

AIA Document A101 – 2017. Copyright © 1915, 1918, 1925, 1937, 1951, 1958, 1961, 1963, 1967, 1974, 1977, 1987, 1991, 1997, 2007 and 2017. All rights reserved. "The American Institute of Architects," "American Institute of Architects," "AIA," the AIA Logo, and "AIA Contract Documents" are trademarks of The American Institute of Architects. This document was produced at 15:10:35 ET on 10/02/2023 under Order No.3104238820 which expires on 06/30/2024, is not for resale, is licensed for one-time use only, and may only be used in accordance with the AIA Contract Documents® Terms of Service. To report copyright violations, e-mail docinfo@aiacontracts.com.
User Notes:

(Check the appropriate box.)

(Paragraph deleted)
[X] Litigation in a court of competent jurisdiction

§ 6.3 Governing Law and Venue
(Paragraph deleted)
This Agreement shall be governed by the laws of the State of Alabama, and the appropriate venue of any actions arising out of this Agreement shall be a court of proper jurisdiction in Mobile, Alabama.

ARTICLE 7 TERMINATION OR SUSPENSION

§ 7.1 The Contract may be terminated by the Owner or the Contractor as provided in Article 14 of AIA Document A201, General Conditions of the Contract for Construction, including Owner's then-current modifications, a copy of which is incorporated in the contract documents and incorporated by reference herein as a part thereof..

(Paragraphs deleted)
§ 7.2 The Work may be suspended by the Owner as provided in Article 14 of AIA Document A201, General Conditions of the Contract for Construction, including Owner's then-current modifications, a copy of which is incorporated in the contract documents and incorporated by reference herein as a part thereof.

ARTICLE 8 MISCELLANEOUS PROVISIONS

§ 8.1 Where reference is made in this Agreement to a provision of AIA Document A201 or another Contract Document, the reference refers to that provision as amended or supplemented by other provisions of the Contract Documents. A copy of such amended, revised or supplemental provision is incorporated in the contract documents and hereby incorporated by reference herein as a part thereof.

§ 8.2 The Owner's representative:
(Name, address, email address, and other information)

Director, REAM
P. O. Box 1827
Mobile, Alabama 36633-1827

§ 8.3 The Contractor's representative:
(Name, address, email address, and other information)

§ 8.4 Neither the Owner's nor the Contractor's representative shall be changed without ten (10) days' prior notice to the other party.

§ 8.5 Insurance and Bonds
§ 8.5.1 The Owner and the Contractor shall purchase and maintain insurance as set forth below:
The Contractor shall purchase and maintain from a company or companies lawfully authorized to do business in the jurisdiction in which the Project is located such insurance as will protect the Contractor from claims set forth below which may arise out of or result from the Contractor's operations be by the Contractor or by a Subcontractor or by anyone directly or indirectly employed by any of them, or by anyone for whose acts any of them may be liable:

.1 Claims under workers' compensation, disability benefit and other similar employee benefit acts that are applicable to the Work to be performed;
.2 Claims for damages because of bodily injury, occupational sickness or disease, or death of the Contractor's employees;

AIA Document A101 – 2017. Copyright © 1915, 1918, 1925, 1937, 1951, 1958, 1961, 1963, 1967, 1974, 1977, 1987, 1991, 1997, 2007 and 2017. All rights reserved. "The American Institute of Architects," "American Institute of Architects," "AIA," the AIA Logo, and "AIA Contract Documents" are trademarks of The American Institute of Architects. This document was produced at 15:10:35 ET on 10/02/2023 under Order No.3104238820 which expires on 06/30/2024, is not for resale, is licensed for one-time use only, and may only be used in accordance with the AIA Contract Documents® Terms of Service. To report copyright violations, e-mail docinfo@aiacontracts.com.
User Notes:

.3 Claims for damages because of bodily injury, sickness or disease, or death of any person other than the Contractor's employees;
.4 Claims for damages insured by usual personal injury liability coverage;
.5 Claims for damages, because of injury to or destruction of tangible property, including loss of use resulting therefrom;
.6 Claims for damages because of bodily injury, death of a person or property damage arising out of ownership, maintenance or use of a motor vehicle;
.7 Claims for bodily injury or property damage arising out of completed operations; and
.8 Claims involving contractual liability insurance applicable to the Contractor's obligations under Section 3.18 of the General Conditions of the Contract for Construction.

The Contractor shall take out and maintain during the life of the Contract no less than the following amounts of insurance with the City of Mobile named as an additional insured. Contractor shall submit a Certificate of Insurance. Insurance companies listed as the "Companies Affording Coverage" shall be authorized by the Secretary of the State of Alabama. Insurance produced out of the State of Alabama must be signed or counter signed by a licensed Agent of Alabama, with the Agent's name, address and telephone number typed or printed on the face of the Certificate of Insurance.

.1 Workmen's Compensation Insurance: - Statutory-amount and coverage as required by all applicable laws, rules or regulations of the State of Alabama and the United States of America, Including the U. S. Longshore and Harbor Workers Act and the Jones Act, if applicable.

.2 Employee's Liability Insurance shall be provided for limits of liability not less than:

A.	Bodily Injury by Accident	$1,000,000 each accident
B.	Bodily Injury by Disease	$1,000,000 each employee
C.	Bodily Injury by Disease	$1,000,000 each policy

.3 United States Longshoreman's Harbor Worker's Act.

.4 Jones Act Coverage (if applicable) placed either in the Workers Compensation or through the Marine General Liability.

.5 The Contractor shall provide Broad Form (commonly termed Comprehensive) General Liability Insurance (including premises-product-completed operations, independent contractors, and blanket contractual liability), specifically covering the obligations assumed by the Contractor for limits of liability not less than:

A.	Bodily Injury	$1,000,000 each person $1,000,000 each occurrence
B.	Property Damage	$1,000,000 each occurrence; or
C.	Bodily Injury and Property Damage	$1,000,000 combined single limit

.6 Such comprehensive policy shall include the following:

A. All liability of the Contractor, for the Contractor's Direct Operations.
B. Subcontractor's Operations.
C. Completed Operations Cover, thereby meaning any loss which shall occur after the contract has been completed, but which can be traced back to the Contract.
D. General Aggregate Limit of $2,000,000 shall apply on a "Per Project" Basis.
E. Contractual Liability, meaning thereby; any risk assumed by the Contractor under Hold Harmless Agreements or any other assumption of liability, but specifically items 11.1.1.8.3G herein below
F. Broad Form Property damage Coverage, including Completed Operations.

AIA Document A101 – 2017. Copyright © 1915, 1918, 1925, 1937, 1951, 1958, 1961, 1963, 1967, 1974, 1977, 1987, 1991, 1997, 2007 and 2017. All rights reserved. "The American Institute of Architects," "American Institute of Architects," "AIA," the AIA Logo, and "AIA Contract Documents" are trademarks of The American Institute of Architects. This document was produced at 15:10:35 ET on 10/02/2023 under Order No.3104238820 which expires on 06/30/2024, is not for resale, is licensed for one-time use only, and may only be used in accordance with the AIA Contract Documents® Terms of Service. To report copyright violations, e-mail docinfo@aiacontracts.com.
User Notes:

G. Personal Injury Liability, with employee's exclusions removed.

H. Explosion and Collapse Hazard:
Included or X Not Applicable.

I. Underground Hazard:
Included or X Not Applicable.

J. Marine General Liability shall include Premises and Operations, Personal and Advertising Injury, Products and Completed Operations, Protection and Indemnity including vessel and crew (if applicable).

K. Deletion of watercraft exclusion with respect to non-owned vessels and contractual Liability for watercraft exposure not covered by Protection and Indemnity policy.

L. The Marine General Liability policy must include an endorsement to cover "Sudden And Accidental Pollution."

.7 The Contractor shall carry for himself and shall require that all Subcontractors and all Owners of Automobiles or trucks rented or hired on the contract carry, until the Contracts is completed, Comprehensive Automobile Liability Coverage for Bodily Injury and property. Damage for any auto in amounts not less than the minimum amounts as indicated. The Contractor and Subcontractor shall also carry for themselves insurance for all non-owned and hired automobile at the limits of liability as indicated below:

A.	Bodily Injury	$1,000,000 each person $1,000,000 each occurrence
B.	Property damage	$1,000,000 each occurrence; or,
C.	Bodily Injury and Property damage	$1,000,000 combined single limit

.8 Umbrella/Excess Liability: $2,000,000 combined single limit each occurrence for bodily injury and/or property damage

.9 Builder's Risk Coverage (Property Insurance): The Contractor shall carry for the Owner, himself, and all Subcontractors a Builder's Risk Policy to cover the full amount of the Contract during construction, fabrication or erection of any equipment.

A. The Contractor shall purchase and maintain, in a company or companies lawfully authorized to do business in the jurisdiction in which the Project is located, property insurance written on a builder's risk "all-risk" or equivalent policy form in the amount of the initial Contract Sum, plus value of subsequent Contract Modifications and cost of materials supplied or installed by others, comprising total value for the entire Project at the site on a replacement cost basis. Such property insurance shall be maintained, unless otherwise provided in the Contract Documents or otherwise agreed in writing by all persons and entities who are beneficiaries of such insurance, until final payment has been made as provided in Section 9.10 or until no person or entity other than the Owner has an insurable interest in the property, whichever is later. This insurance shall include interests of the Owner, the Contractor, Subcontractors, Sub-subcontractors, and the Design Professionals in the Project.

B. Property insurance shall be on an "all-risk" or equivalent policy form and shall include, without limitation, insurance against the perils of fire (with extended coverage) and physical loss or damage including, without duplication of coverage, theft, vandalism, malicious mischief, collapse, windstorm, falsework, testing and startup, temporary buildings and debris removal including demolition occasioned by enforcement of any applicable legal requirements, and shall cover reasonable compensation for Architect's and Contractor's services and expenses required as a result of such insured loss.

AIA Document A101 – 2017. Copyright © 1915, 1918, 1925, 1937, 1951, 1958, 1961, 1963, 1967, 1974, 1977, 1987, 1991, 1997, 2007 and 2017. All rights reserved. "The American Institute of Architects," "American Institute of Architects," "AIA," the AIA Logo, and "AIA Contract Documents" are trademarks of The American Institute of Architects. This document was produced at 15:10:35 ET on 10/02/2023 under Order No.3104238820 which expires on 06/30/2024, is not for resale, is licensed for one-time use only, and may only be used in accordance with the AIA Contract Documents® Terms of Service. To report copyright violations, e-mail docinfo@aiacontracts.com.
User Notes:
(1718960944)

C. If the property insurance requires deductibles, the Contractor shall pay costs not covered because of such deductibles. Deductibles shall be limited to a maximum of $2,500.00 unless the loss is caused by windstorm; then deductible shall be a maximum of three percent (3%) of the insured value.

D. This property insurance shall cover the full value of equipment, material, and other portions of the Work stored off the site, and also portions of the Work in transit. There shall be no limits on the value of loss per occurrence.

E. A named storm endorsement is required. The deductible shall be a maximum of three percent (3%) of the insured value.

.10 A Surety authorized to do business in the State of Alabama shall furnish the required Insurance.

.11 The standard ACORD™ format shall be provided. The ACORD™ Certificate must be signed or countersigned by a Licensed Resident Agent of the State of Alabama and the agent's name, address and telephone number must appear on the face of the certificate.

.12 The Surety must have a minimum rating of A/Class VI as reported in the latest issue of Best's Key Rating Guide Property-Casualty, published by Alfred M. Best Company, Inc. if the bid price exceeds $50,000.00.

.13 "In Rem" endorsement.

The insurance shall be written for not less than limits of liability specified in the Contract Documents or required by law, whichever coverage is greater. Coverages, whether written on an occurrence or claims-made basis, shall be maintained without interruption from the date of commencement of the Work until the date of final payment and termination of any coverage required to be maintained after final payment, and, with respect to the Contractor's completed operations coverage, until the expiration of the period for correction of Work or for such other period for maintenance of completed operations coverage as specified in the Contract Documents.

Certificates of insurance acceptable to the Owner shall be filed with the Owner within ten (10) calendar days from date of issuance of contract forms for execution. Contractor shall deliver to the City of Mobile, certificates of insurance certifying the existence and limits of the insurance coverages along with separate policy endorsements. Contractor shall also be responsible for delivering policy renewal certificates to the City of Mobile, and thereafter upon renewal or replacement of each required policy of insurance. These certificates and the insurance policies shall contain a provision that coverages afforded under the policies will not be cancelled subject to non-renewal nor material change, or allowed to expire without at least thirty (30) days' (except ten (10) days from non-payment) prior written notice has been given to the Owner. An additional certificate evidencing continuation of liability coverage, including coverage for completed operations, shall be submitted with the final Application for Payment and thereafter upon renewal or replacement of such coverage until the expiration of the time. Information concerning reduction of coverage on account of revised limits or claims paid under the General Aggregate, or both, shall be furnished by the Contractor with reasonable promptness.

All policies of insurance, except worker's compensation, shall be endorsed to provide that all such insurances are primary and non-contributing with any other insurance maintained by the City of Mobile and endorsed to waive rights of subrogation in favor of the City of Mobile.

The Contractor shall cause the commercial liability coverage required by the Contract Documents to include (1) the Owner, the Architect and the Architect's Consultants as additional insureds for claims caused in whole or in part by the Contractor's negligent acts or omissions during the Contractor's operations; and (2) the Owner as an additional insured for claims caused in whole or in part by the Contractor's negligent acts or omissions during the Contractor's completed operations.

AIA Document A101 – 2017. Copyright © 1915, 1918, 1925, 1937, 1951, 1958, 1961, 1963, 1967, 1974, 1977, 1987, 1991, 1997, 2007 and 2017. All rights reserved. "The American Institute of Architects," "American Institute of Architects," "AIA," the AIA Logo, and "AIA Contract Documents" are trademarks of The American Institute of Architects. This document was produced at 15:10:35 ET on 10/02/2023 under Order No.3104238820 which expires on 06/30/2024, is not for resale, is licensed for one-time use only, and may only be used in accordance with the AIA Contract Documents® Terms of Service. To report copyright violations, e-mail docinfo@aiacontracts.com.
User Notes:

(1718960944)

§ 8.5.2 The Contractor shall provide bonds as set forth below:
Contractor shall furnish bonds covering faithful performance of the Contract and payment of obligations arising thereunder.

Upon the request of any person or entity appearing to be a potential beneficiary of bonds covering payment of obligations arising under the Contract, the Contractor shall promptly furnish a copy of the bonds or shall authorize a copy to be furnished.

The Labor and Material Payment Bond and the Performance Bond shall each be for one hundred percent (100%) of the Contract Sum.

1. Bond shall be submitted with the executed agreement on provided form(s).

2. Power of Attorney is required for both bonds.

3. A Surety authorized to do business in the State of Alabama shall furnish both bonds.

4. A Surety licensed to do business in the State of Alabama must execute the bonds.

5. The Surety must have a minimum rating of A/Class VI as reported in the latest issue of Best's Key Rating Guide Property-Casualty, published by Alfred M. Best Company, Inc., if the bid price exceeds $50,000.00.

6. The Surety company shall be required to execute AIA Document G-707, "Consent of Surety to Final Payment" prior to Final Payment being made to the Contractor.

§ 8.6
(Paragraphs deleted)
Indemnification:
The Contractor shall indemnify, defend and hold harmless City and its officers, elected officials, agents, representatives, and employees in respect of any and all claims, injuries, losses, diminution in value, damages, liabilities, whether or not currently due, and related expenses (including without limitation, settlement costs and any legal or other expenses for investigating or defending any actions or threatened actions) arising from or in connection with the contractor's performance under this agreement, including but not limited to, environmental laws, regulations, orders and decrees of whatever character or nature and damage or injury to persons or property. Contractor hereby confirms and agrees that Contractor is not a 'design professional' as defined in Alabama Act 2021-318, and not required to carry professional liability insurance for the performance or obligations of this contract.

§ 8.7 Other Provisions:
Contractor shall provide a minimum one (1) year warranty from the date of substantial completion of all Labor and Materials for the Work covered by this contract, unless otherwise specified. Labor and Material warranties required by other sections of the construction document shall not conflict with this provision. The most stringent warranty provision shall apply.

§ 8.8 Force Majeure:
In the event that either party hereto shall be delayed or hindered in or prevented from the performance of any act required hereunder by reason of strikes, lockouts, labor troubles, inability to procure materials, failure of power, restrictive governmental laws or regulations, riots, insurrection, war, Act of God, or other reason of a like nature not the fault of the party delayed in performing work or doing acts required under the terms of this Agreement, then performance of such act shall be excused for the period of the delay and the period for the performance of any such act shall be extended for a period equivalent to the period of such delay.

ARTICLE 9 ENUMERATION OF CONTRACT DOCUMENTS

§ 9.1 This Agreement is comprised of the following documents:

.1 AIA Document A101™–2017, Standard Form of Agreement Between Owner and Contractor

.2 AIA Document A201, General Conditions of the Contract for

AIA Document A101 – 2017. Copyright © 1915, 1918, 1925, 1937, 1951, 1958, 1961, 1963, 1967, 1974, 1977, 1987, 1991, 1997, 2007 and 2017. All rights reserved. "The American Institute of Architects," "American Institute of Architects," "AIA," the AIA Logo, and "AIA Contract Documents" are trademarks of The American Institute of Architects. This document was produced at 15:10:35 ET on 10/02/2023 under Order No.3104238820 which expires on 06/30/2024, is not for resale, is licensed for one-time use only, and may only be used in accordance with the AIA Contract Documents® Terms of Service. To report copyright violations, e-mail docinfo@aiacontracts.com.
User Notes:

(Paragraphs deleted)

Construction, including Owner's then-current modifications, a copy of which is incorporated in the contract documents and incorporated by reference herein as a part thereof.

(Paragraphs deleted)

.3 Drawings

Number	Title	Date
Lavretta		
CS100	COVER SHEET	10/16/2023
LS010	OVERALL SITE PLAN	10/16/2023
EC100	EXISTING CONDITIONS	10/16/2023
LD100	LANDSCAPE DEMOLITION PLAN	10/16/2023
LS100	LANDSCAPE SITE PLAN	10/16/2023
LG100	GRADING AND DRAINAGE PLAN	10/16/2023
LH100	HARDSCAPE PLAN	10/16/2023
LH500	HARDSCAPE DETAILS	10/16/2023
LH501	HARDSCAPE DETAILS	10/16/2023
LH502	HARDSCAPE DETAILS	10/16/2023
LH503	HARDSCAPE DETAILS	10/16/2023
LH504	HARDSCAPE DETAILS	10/16/2023
LP100	LANDSCAPE PLANTING PLAN	10/16/2023
LP500	LANDSCAPE PLANTING DETAILS	10/16/2023
C1.1	CIVIL GRADING & DRAINAGE PLAN	10/16/2023
C1.2	CIVIL DETAILS	10/16/2023
C1.3	CIVIL NOTES	10/16/2023
E100	ELECTRICAL LEGEND AND SPECIFICATIONS	10/16/2023
E200	ELECTICAL SITE PLAN - EXISTING	10/16/2023
E300	ELECTRICAL SITE PLAN - NEW WORK	10/16/2023
E400	ENLARGED PICKLEBALL COURT LIGHTING - NEW WORK	10/16/2023
E500	ENLARGED PAVILION LIGHTED - POWER - NEW WORK	10/16/2023
E600	NORTH PARKING LOT LIGHTING - NEW WORK	10/16/2023
E700	SOUTH PARKING LOT LIGHTING - NEW WORK	10/16/2023
E800	ELECTRICAL DETAILS	10/16/2023
E900	ELECTRICAL DETAILS	10/16/2023
Hillsdale		
CS100	COVER SHEET	10/16/2023
EC100	EXISTING CONDITIONS	10/16/2023
LD100	LANDSCAPE DEMOLITION PLAN	10/16/2023
LS100	LANDSCAPE SITE PLAN	10/16/2023
LG100	LANDSCAPE GRADING PLAN	10/16/2023
LH100	HARDSCAPE PLAN	10/16/2023
LH500	HARDSACPE DETAILS	10/16/2023
LH501	HARDSCAPE DETAILS	10/16/2023
LH502	HARDSCAPE DETAILs	10/16/2023
LH503	HARDSCAPE DETAILS	10/16/2023
LH504	HARDSCAPE DETAILS	10/16/2023
E100	ELECTRICAL LEGEND AND SPECIFICATIONS	10/16/2023
E200	EXISTING OVERALL PLAN - ELECTRICAL	10/16/2023
E201	EXISTING PLAN - ENLARGED ELECTRICAL	10/16/2023
E300	NEW WORK OVERALL PLAN - ELECTRICAL	10/16/2023
E301	ENLARGED NEW WORK PLAN - ELECTRICAL	10/16/2023
E400	ELECTRICAL DETAILS	10/16/2023
E401	ELECTRICAL DETAILS	10/16/2023

.4 Specifications

AIA Document A101 – 2017. Copyright © 1915, 1918, 1925, 1937, 1951, 1958, 1961, 1963, 1967, 1974, 1977, 1987, 1991, 1997, 2007 and 2017. All rights reserved. "The American Institute of Architects," "American Institute of Architects," "AIA," the AIA Logo, and "AIA Contract Documents" are trademarks of The American Institute of Architects. This document was produced at 15:10:35 ET on 10/02/2023 under Order No.3104238820 which expires on 06/30/2024, is not for resale, is licensed for one-time use only, and may only be used in accordance with the AIA Contract Documents® Terms of Service. To report copyright violations, e-mail docinfo@aiacontracts.com.
User Notes:
(1718960944)

Section	Title	Date
DIVISION 1:	GENERAL REQUIREMENTS	10/16/2023
SECTION 01010	SCOPE OF WORK	10/16/2023
SECTION 01050	FIELD ENGINEERING	10/16/2023
SECTION 01210	ALLOWANCES	10/16/2023
SECTION 01220	UNIT PRICES	10/16/2023
SECTION 01230	ALTERNATES	10/16/2023
SECTION 01251	PRE-BID SUBSTITUTION PROCEDURES	10/16/2023
SECTION 01260	CONTRACT MODIFICATION PROCEDURES	10/16/2023
SECTION 01290	PAYMENT PROCEDURES	10/16/2023
SECTION 01310	PROJECT MANAGEMENT AND COORDINATION	10/16/2023
	SUBMITTAL PROCEDURES	
SECTION 01330	QUALITY CONTROL TESTING PROCEDURES	10/16/2023
SECTION 01401	CONSTRUCTION FACILITIES AND	10/16/2023
SECTION 01500	TEMPORARY CONTROLS	10/16/2023
	EXECUTION REQUIREMENTS	
SECTION 01700	CUTTING AND PATCHING	10/16/2023
SECTION 01731	SELECTIVE DEMOLITION	10/16/2023
SECTION 01732	SUBSTITUTION PROCEDURES	10/16/2023
SECTION 01735	CLOSEOUT PROCEDURES	10/16/2023
SECTION 01770	OPERATION AND MAINTENANCE DATA	10/16/2023
SECTION 01782	PROJECT RECORD DOCUMENTS	10/16/2023
SECTION 01783		10/16/2023
	SITE WORK	
DIVISION 2:	SELECTIVE SITE DEMOLITION	10/16/2023
SECTION 02070	SITE CLEARING	10/16/2023
SECTION 02230	EARTHWORK	10/16/2023
SECTION 02300	PICKLEBALL COURT SURFACING	10/16/2023
SECTION 02462	ASPHALTIC CONCRETE PAVING	10/16/2023
SECTION 02513	CEMENT CONCRETE PAVEMENT	10/16/2023
SECTION 02751	CHAIN LINK FENCES AND GATES	10/16/2023
SECTION 02821	LANDSCAPING	10/16/2023
SECTION 02900	CAST-IN PLACE CONCRETE	10/16/2023
SECTION 03300		10/16/2023

.5 Addenda, if any:

Number	Date

Portions of Addenda relating to bidding or proposal requirements are not part of the Contract Documents unless the bidding or proposal requirements are also enumerated in this Article 9.

.6 Other Exhibits:
(Check all boxes that apply and include appropriate information identifying the exhibit where required.)

(Paragraphs deleted)
§ 9.2
(Paragraph deleted)
Supplementary and other Conditions of the Contract:

Document	Title	Date	Pages
N/A			

AIA Document A101 – 2017. Copyright © 1915, 1918, 1925, 1937, 1951, 1958, 1961, 1963, 1967, 1974, 1977, 1987, 1991, 1997, 2007 and 2017. All rights reserved. "The American Institute of Architects," "American Institute of Architects," "AIA," the AIA Logo, and "AIA Contract Documents" are trademarks of The American Institute of Architects. This document was produced at 15:10:35 ET on 10/02/2023 under Order No.3104238820 which expires on 06/30/2024, is not for resale, is licensed for one-time use only, and may only be used in accordance with the AIA Contract Documents® Terms of Service. To report copyright violations, e-mail docinfo@aiacontracts.com.
User Notes:
(1718960944)

§ 9.2.1 Other documents, if any, listed below:

(List here any additional documents that are intended to form part of the Contract Documents. AIA Document A201™–2017 provides that the advertisement or invitation to bid, Instructions to Bidders, sample forms, the Contractor's bid or proposal, portions of Addenda relating to bidding or proposal requirements, and other information furnished by the Owner in anticipation of receiving bids or proposals, are not part of the Contract Documents unless enumerated in this Agreement. Any such documents should be listed here only if intended to be part of the Contract Documents.)

BIDDING AND CONTRACT REQUIREMENTS

Section 00100	Invitation to Bid
Section 00200	Instructions to Bidders-AIA Document A701-2018
Section 00300	Supplementary Instructions to Bidders
Section 00400	Lavretta Park - Bid For
	Hillsdale Park - Bid Form
	Lavretta Park - Accounting of Sales Tax Form C-3A
	Hillsdale Park - Accounting of Sales Tax Form C-3A
	Lavretta Park - Supplier Diversity Subcontracting and Major Supplier Plan
	Hillsdale Park - Supplier Diversity Subcontracting and Major Supplier Plan
Section 00500	Standard Form of Agreement Between Owner and Contractor AIA Document A101
Section 00600	Bonds, Certificates and Affidavits
	Performance Bond
	Labor and Material Payment Bond
	E-Verify Documentation (Sample)
	Application and Certificate for Payment-AIA Document G702and G703 with DBE Utilization Report
	Certificate of Substantial Completion-AIA Document G704
	Contractor's Affidavit of Payment of Debts and Claims-AIA Document G706
	Contractor's Affidavit of Release of Liens-AIA Document G706A
	Consent of Surety to Final Payment-AIA Document G707
	Request for Taxpayer Identification Number and Certification W9 Tax Form and City of Mobile Vendor Information Form
Section 00700	General Conditions of the Contract for Construction-AIA Document A201

§ 9.2.2 Best Management Practices (BMPs):
The Contractor shall be responsible for providing, implementing and maintaining BMPs for sediment and erosion control in full compliance with all applicable Local, State and Federal Codes and Ordinances throughout the contract period. All Work shall be in accordance with the Clean Water Act; the Alabama Water Pollution Control Act; the current version of the Alabama Handbook for Erosion Control, Sediment Control Stormwater Management on Construction sites and Urban Areas; and the current version of the Mobile, Alabama City Code Chapter 17 Stormwater Management and Flood Control. All Waste water with oils, grease, paint, mortar, etc., shall be properly contained and disposed of.

§ 9.2.3 Contractor shall comply with all Federal, State and local laws concerning nondiscrimination, including but not limited to City of Mobile Ordinance No. 14-034 which requires, *inter alia*, that all contractors performing work for the City of Mobile not discriminate on the basis of race, creed, color, national origin or disability, require that all subcontractors they engage do the same, and make every reasonable effort to assure that fifteen percent of the work performed under contract be awarded to socially and economically disadvantaged individuals and business entities.

§ 9.2.4 By signing this contract, the contracting parties affirm, for the duration of the agreement, that they will not violate federal immigration law or knowingly employ, hire for employment, or continue to employ an unauthorized alien within the State of Alabama. Furthermore, a contracting party found to be in violation of this provision shall be deemed in breach of the agreement and shall be responsible for all damages resulting therefrom.

AIA Document A101 – 2017. Copyright © 1915, 1918, 1925, 1937, 1951, 1958, 1961, 1963, 1967, 1974, 1977, 1987, 1991, 1997, 2007 and 2017. All rights reserved. "The American Institute of Architects," "American Institute of Architects," "AIA," the AIA Logo, and "AIA Contract Documents" are trademarks of The American Institute of Architects. This document was produced at 15:10:35 ET on 10/02/2023 under Order No.3104238820 which expires on 06/30/2024, is not for resale, is licensed for one-time use only, and may only be used in accordance with the AIA Contract Documents® Terms of Service. To report copyright violations, e-mail docinfo@aiacontracts.com.
User Notes:

(1718960944)

§ 9.2.5 Public Contracts with Entities Engaging in certain Boycott Activities:
By signing this contract, the Contractor further represents and agrees that it is not currently engaged in, nor will it engage in, any boycott of a person or entity based in or doing business with a jurisdiction with which the State of Alabama can enjoy open trade.

§ 9.2.6 Severability Clause:
In case any one or more of the provisions contained in this Agreement shall for any reason be held to be invalid, illegal or unenforceable in any respect, such invalidity, illegality or unenforceability shall not affect any other provisions of this Agreement, but this Agreement shall be construed as if such invalid or illegal or unenforceable provision had never been contained herein. Upon such determination that any term or other provision is invalid, illegal or unenforceable, the court or other tribunal making such determination is authorized and instructed to modify this Agreement so as to effect the original intent of the parties as closely as possible so that the transactions and agreements contemplated herein are consummated as originally contemplated to the fullest extent possible.

§ 9.2.7 Non-Agency Clause:
Contractor, in the performance of its operations and obligations hereunder, shall not be deemed to be an agent of City but shall be deemed to be an independent Contractor in every respect and shall take all steps at its own expense, as City may from time to time request, to indicate that it is an independent Contractor. City does not and will not assume any responsibility for the means by which or the manner in which the services by Contractor provided for herein are performed, but on the contrary, Contractor shall be wholly responsible therefore.

REMAINDER OF PAGE INTENTIONALLY LEFT BLANK

AIA Document A101 – 2017. Copyright © 1915, 1918, 1925, 1937, 1951, 1958, 1961, 1963, 1967, 1974, 1977, 1987, 1991, 1997, 2007 and 2017. All rights reserved. "The American Institute of Architects," "American Institute of Architects," "AIA," the AIA Logo, and "AIA Contract Documents" are trademarks of The American Institute of Architects. This document was produced at 15:10:35 ET on 10/02/2023 under Order No.3104238820 which expires on 06/30/2024, is not for resale, is licensed for one-time use only, and may only be used in accordance with the AIA Contract Documents® Terms of Service. To report copyright violations, e-mail docinfo@aiacontracts.com.
User Notes:
(1718960944)

This Agreement entered into as of the day and year first written above.

City of Mobile

Legal Name of Party to Contract:
Contractor:

OWNER *(Signature)*

CONTRACTOR *(By Signature)*

William S. Stimpson, Mayor

(Rows deleted)
(Printed name and title)

(Printed name and title)

ATTEST:

City Clerk

STATE OF ALABAMA
COUNTY OF MOBILE
Before me, the undersigned a Notary Public in and for said County and State, personally appeared
as President of , Inc. and after being
duly sworn, did depose and say that he, as such officer and with full authority, signed the above and foregoing voluntarily as the act of said corporation on the day the same bears date.
Sworn to and subscribed for me this _____ day of _____, 20_____.

NOTARY PUBLIC
My Commission Expires: _____

AIA Document A101 – 2017. Copyright © 1915, 1918, 1925, 1937, 1951, 1958, 1961, 1963, 1967, 1974, 1977, 1987, 1991, 1997, 2007 and 2017. All rights reserved. "The American Institute of Architects," "American Institute of Architects," "AIA," the AIA Logo, and "AIA Contract Documents" are trademarks of The American Institute of Architects. This document was produced at 15:10:35 ET on 10/02/2023 under Order No.3104238820 which expires on 06/30/2024, is not for resale, is licensed for one-time use only, and may only be used in accordance with the AIA Contract Documents® Terms of Service. To report copyright violations, e-mail docinfo@aiacontracts.com.
User Notes:
(1718960944)

Additions and Deletions Report for

AIA® Document A101® – 2017

This Additions and Deletions Report, as defined on page 1 of the associated document, reproduces below all text the author has added to the standard form AIA document in order to complete it, as well as any text the author may have added to or deleted from the original AIA text. Added text is shown underlined. Deleted text is indicated with a horizontal line through the original AIA text.

Note: This Additions and Deletions Report is provided for information purposes only and is not incorporated into or constitute any part of the associated AIA document. This Additions and Deletions Report and its associated document were generated simultaneously by AIA software at 15:10:35 ET on 10/02/2023.

PAGE 1

City of Mobile
P. O. Box 1827
Mobile, Alabama 36633-1827

...

...

City of Mobile Business License Number:
Secretary of State Registration Number:

...

Lavretta Park – Pickleball Court
200 West Parkway Drive, Mobile, Alabama 36608
PR-073-22
and
Hillsdale Park – Pickleball Court
558 East Felhorn Road, Mobile, Alabama 36608
PR-041-22

...

Architectural Engineering Department
P. O. Box 1827
Mobile, Alabama 36633-1827

PAGE 2

9 ENUMERATION OF CONTRACT ~~DOCUMENTS~~

~~EXHIBIT A~~ DOCUMENTS, INSURANCE AND BONDS

...

The Contractor shall fully execute the Work described in the Contract Documents, except as specifically indicated in the Contract Documents to be the responsibility of ~~others.~~others (See attachment Exhibit A).

...

Additions and Deletions Report for AIA Document A101 – 2017. Copyright © 1915, 1918, 1925, 1937, 1951, 1958, 1961, 1963, 1967, 1974, 1977, 1987, 1991, 1997, 2007 and 2017. All rights reserved. "The American Institute of Architects," "American Institute of Architects," "AIA," the AIA Logo, and "AIA Contract Documents" are trademarks of The American Institute of Architects. This document was produced at 15:10:35 ET on 10/02/2023 under Order No.3104238820 which expires on 06/30/2024, is not for resale, is licensed for one-time use only, and may only be used in accordance with the AIA Contract Documents® Terms of Service. To report copyright violations, e-mail docinfo@aiacontracts.com.
User Notes:

(1718960944)

~~[ ] The date of this Agreement.~~

[X] A date set forth in a notice to proceed issued by the Owner.

~~[ ] Established as follows:~~

~~*(Insert a date or a means to determine the date of commencement of the Work.)*~~

~~If a date of commencement of the Work is not selected, then the date of commencement shall be the date of this Agreement.~~

...

[X] Not later than one-hundred eighty (180) calendar days from the date of the Notice to Proceed for commencement of the Work.

~~[ ] By the following date:~~

~~§ 3.3.2 Subject to adjustments of the Contract Time as provided in the Contract Documents, if portions of the Work are to be completed prior to Substantial Completion of the entire Work, the Contractor shall achieve Substantial Completion of such portions by the following dates:~~

~~**Portion of Work** **Substantial Completion Date**~~

PAGE 3

§ 4.1 The Owner shall pay the Contractor the Contract Sum in current funds for the Contractor's performance of the Contract. The Contract Sum shall be and 00/100 Dollars ($), subject to additions and deductions as provided in the Contract ~~Documents.~~Documents.

Lavretta Park

Base Bid:	$
Contingency Allowance:	$50,000.00
Total Bid:	$
Add. Alt. #1	$

Hillsdale Park

Base Bid:	$
Contingency Allowance:	$25,000.00
Total Bid:	$
Add. Alt. #1	$

...

Add. Alt. #1

~~§ 4.2.2 Subject to the conditions noted below, the following alternates may be accepted by the Owner following execution of this Agreement. Upon acceptance, the Owner shall issue a Modification to this Agreement.~~

~~*(Insert below each alternate and the conditions that must be met for the Owner to accept the alternate.)*~~

~~**Item** **Price** **Conditions for Acceptance**~~

...

Additions and Deletions Report for AIA Document A101 – 2017. Copyright © 1915, 1918, 1925, 1937, 1951, 1958, 1961, 1963, 1967, 1974, 1977, 1987, 1991, 1997, 2007 and 2017>. All rights reserved. "The American Institute of Architects," "American Institute of Architects," "AIA," the AIA Logo, and "AIA Contract Documents" are trademarks of The American Institute of Architects. This draft was produced at 15:10:35 ET on 10/02/2023 under Order No.3104238820 which expires on 06/30/2024, is not for resale, is licensed for one-time use only, and may only be used in accordance with the AIA Contract Documents® Terms of Service. To report copyright violations, e-mail docinfo@aiacontracts.com.
User Notes:

(1718960944)

Item	Price

Lavretta Park Contingency Allowance: Fifty thousand and 00/100 Dollars ($50,000.00)
Hillsdale Park Contingency Allowance: Twenty-Five thousand and 00/100 Dollars ($25,000.00)

A. Contingency Allowance shall cover cost of material, labor, overhead, profit and other expenses for complete installation of items of additional work as required for a complete, functional project.
B. Contingency Allowance shall be used for unforeseen conditions not covered in the construction documents.
C. All extra work under this section must be authorized by the Owner, in writing, prior to materials or undertaking work.
D. Upon completion of the Work, the unused portion of the Allowance shall be credited back to the Owner in the form of a Change Order.
E. Allowances are subject to the same provision of AIA 201 Article 7.3.7.

...

Lavretta Park

1. 6" recycled concrete paving	S.F.
2. Centipede sod	S.Y.
3. 4"Fiber reinforced concrete paving	S.F.
4. 4' Galvanized chain link fence	L.F.
5. Crush and Run paving	S.F
6. 8" Ribbon curb at parking	L.F
7. Utility water Line	L.F.

Hillsdale Park

1. 6" Asphalt paving	S.F.
2. Centipede sod	S.Y.
3. 4" Fiber reinforced concrete paving	S.F.
4. Utility water Line	L.F.

§ 4.5 Liquidated ~~damages, if any:~~damages:
(Insert terms and conditions for liquidated damages, if any.)

A time charge equal to Two Hundred Fifty and 00/100 Dollars ($250.00) per calendar day will be made against the Contractor for the entire period that any part of the Work remains uncompleted or any required closeouts documents are not acceptably submitted for more than thirty (30) days after the date specified for the substantial Completion of the Work, the amount of which shall be deducted by the owner, and shall be retained by the Owner out of monies otherwise due the Contractor in the final payment, not as a penalty, but as liquidated damages sustained.

~~**§ 4.6** Other:~~
~~*(Insert provisions for bonus or other incentives, if any, that might result in a change to the Contract Sum.)*~~

PAGE 4

§ 5.1.2 The period covered by each Application for Payment shall be one calendar month ending on the ~~last day of the month, or as follows:~~25th of the month.

...

§ 5.1.3 Provided that an Application for Payment in acceptable format is received by the Architect not later than the first 1st day of a month, the Owner shall make payment of the amount certified to the Contractor not later than the

Additions and Deletions Report for AIA Document A101 – 2017. Copyright © 1915, 1918, 1925, 1937, 1951, 1958, 1961, 1963, 1967, 1974, 1977, 1987, 1991, 1997, 2007 and 2017>. All rights reserved. "The American Institute of Architects," "American Institute of Architects," "AIA," the AIA Logo, and "AIA Contract Documents" are trademarks of The American Institute of Architects. This draft was produced at 15:10:35 ET on 10/02/2023 under Order No.3104238820 which expires on 06/30/2024, is not for resale, is licensed for one-time use only, and may only be used in accordance with the AIA Contract Documents® Terms of Service. To report copyright violations, e-mail docinfo@aiacontracts.com.
User Notes:

(1718960944)

tenth 10th day of the following month. If an Application for Payment in acceptable format is received by the Architect after the application date fixed above, payment of the amount certified shall be made by the Owner not later than forty (40) days after the Architect receives the Application for Payment.

...

§ 5.1.4 Each Application for Payment shall be based on the most recent schedule of values submitted by the Contractor in accordance with the Contract Documents. The schedule of values shall allocate the entire Contract Sum among the various portions of the Work. The schedule of values shall be prepared in such form, and supported by such data to substantiate its accuracy, as the Architect may require. This accepted schedule of values shall be used as a basis for reviewing the Contractor's Applications for Payment.

...

§ 5.1.6 In accordance with AIA Document ~~A201™–2017,~~ A201, General Conditions of the Contract for ~~Construction,~~ Construction (including Owner's then-current modifications), and subject to other provisions of the Contract Documents, the amount of each progress payment shall be computed as follows:

...

.2 That portion of the Contract Sum properly allocable to materials and equipment delivered and suitably stored at the site for subsequent incorporation in the completed construction, or, if approved in advance by the Owner, suitably stored off the site at a location agreed upon in ~~writing; and~~writing and insured as specified;

.3 ~~That portion of Construction Change Directives that the Architect determines, in the Architect's professional judgment, to be reasonably justified.~~Completed work shall be determined by multiplying the percentage completion of each portion of the Work by the share of the Contract Sum allocated to that portion of the Work in the schedule of values.

PAGE 5

§ 5.1.6.3 Any Progress Payment shall include partial release of liens for material and labor for previous application for payment amount approved and paid. The DBE Utilization Report shall be included with the pay application.

...

Five percent (5%) of the first fifty percent (50%) of the completed work and after fifty percent (50%) completion has been accomplished, no further retainage shall be held from the original Contract Sum. Increases in the contract sum by Change Order shall also be subject to retainage.

...

N/A

~~**§ 5.1.7.2** Reduction or limitation of retainage, if any, shall be as follows:~~
~~*(If the retainage established in Section 5.1.7.1 is to be modified prior to Substantial Completion of the entire Work, including modifications for Substantial Completion of portions of the Work as provided in Section 3.3.2, insert provisions for such modifications.)*~~

...

Additions and Deletions Report for AIA Document A101 – 2017. Copyright © 1915, 1918, 1925, 1937, 1951, 1958, 1961, 1963, 1967, 1974, 1977, 1987, 1991, 1997, 2007 and 2017>. All rights reserved. "The American Institute of Architects," "American Institute of Architects," "AIA," the AIA Logo, and "AIA Contract Documents" are trademarks of The American Institute of Architects. This draft was produced at 15:10:35 ET on 10/02/2023 under Order No.3104238820 which expires on 06/30/2024, is not for resale, is licensed for one-time use only, and may only be used in accordance with the AIA Contract Documents® Terms of Service. To report copyright violations, e-mail docinfo@aiacontracts.com.
User Notes:

(1718960944)

The net amount of the Retainage shall be equal to two and one half percent (2.5%) of total Contract Sum, as increased or decreased by Change Order.

§ 5.1.8 If final completion of the Work is materially delayed through no fault of the Contractor, the Owner shall pay the Contractor any additional amounts in accordance with Article 9 of AIA Document ~~A201–2017.~~A201.

...

§ 5.2.1 Final monthly progress payment, constituting the entire unpaid balance of the Contract Sum, less retainage, shall be made by the Owner to the Contractor when

.1 the Contractor has fully performed the Contract except for the Contractor's responsibility to correct Work as provided in Article 12 of AIA Document ~~A201–2017,~~ A201 (including Owner's then-current modifications which may be obtained from the Owner or, alternatively, a copy of which is incorporated in the Project Manual and incorporated by reference herein as a part thereof), and to satisfy other requirements, if any, which extend beyond final payment; and

.2 a ~~final Certificate for Payment~~ Certificate of Substantial Completion has been issued by the ~~Architect.~~Architect/Owner and the project accepted.

§ 5.2.2 The Owner's final payment to the Contractor ~~shall be made no later than 30 days after the issuance of the Architect's final Certificate for Payment, or as follows:~~
of retainage shall be made as follows:

The final two and one half percent (2.5%) of the total Contract Sum retained will not be paid until proof of publication is submitted and all written claims paid in full. Contractor to submit the following:
•Contractor's Affidavit of Payment of Debts and Claims (AIA form G706, included in contract documents) with
a.) Contractor's Release or Waiver of Liens
b.) Releases or Waivers of Liens from Subcontractors and Material and Equipment Suppliers;
•Contractor's Affidavit of Release of Liens (AIA form G706A, included in contract documents);
•Consent of Surety, if any, to final payment (AIA form G707, included in contract documents);
•Any additional close out requirements per the contract documents; and
•Notarized Affidavit of Notice of Completion advertisement from publisher.

Contractor shall provide proof of publication of Notice of Completion in a local newspaper once per week for four (4) consecutive weeks, as required in the Title 39, Section 39-1-1, Subsection (f), of the Code of Alabama quoted below. "The Contractor shall, immediately after the completion of the contract, give notice of Completion by an advertisement in a newspaper of general circulation published within the city or county in which the work has been done, for a period of four (4) consecutive weeks. A final settlement shall not be made upon the contract until the expiration of thirty (30) days after the completion of the notice. Proof of publication of the notice shall be made by the contractor to the authority by whom the contract was made by affidavit of the publisher and a printed copy of the notice published. If no newspaper is published in the county in which the work is done, the notice may be given by the contract." (Acts 1927, No. 39, 9.37; Acts 1935, No. 39, 9. 70; Code 1940, T. 50, Section 16; Acts 1983, No. 83-737, 9.1203; Acts 1989, No. 89-650m 9. 1284, Section 1; Acts 1994, No. 94-207, p. 270, Section 1; Acts 1997, No. 97-225, p. 348, Section 1.)

The Notice of Completion shall read as follows:

STATE OF ALABAMA
COUNTY OF MOBILE
NOTICE OF COMPLETION
In accordance with Chapter I, Title 39, Code of Alabama, 1975, NOTICE IS HEREBY given that (Contractor) has completed the contract for Lavretta Park – Pickleball Courts, 200 West Parkway Drive, Mobile, Alabama 36608, PR-073-22 and Hillsdale Park – 558 East Felhorn Road, Mobile, Alabama 36608, PR-041-22. All persons having any claims for labor, material or otherwise in connection with this project should immediately notify the Architectural Engineering Department, City of Mobile, P. O. Box 1827, Mobile, Alabama 36633-1827.

Additions and Deletions Report for AIA Document A101 – 2017. Copyright © 1915, 1918, 1925, 1937, 1951, 1958, 1961, 1963, 1967, 1974, 1977, 1987, 1991, 1997, 2007 and 2017>. All rights reserved. "The American Institute of Architects," "American Institute of Architects," "AIA," the AIA Logo, and "AIA Contract Documents" are trademarks of The American Institute of Architects. This draft was produced at 15:10:35 ET on 10/02/2023 under Order No.3104238820 which expires on 06/30/2024, is not for resale, is licensed for one-time use only, and may only be used in accordance with the AIA Contract Documents® Terms of Service. To report copyright violations, e-mail docinfo@aiacontracts.com.
User Notes:

(1718960944)

Publication of the Notice of Completion shall not begin until the Project has been accepted as Substantially Complete by the City of Mobile.

~~**§ 5.3 Interest**~~
~~Payments due and unpaid under the Contract shall bear interest from the date payment is due at the rate stated below, or in the absence thereof, at the legal rate prevailing from time to time at the place where the Project is located.~~
~~*(Insert rate of interest agreed upon, if any.)*~~

~~—%~~

PAGE 6

The ~~Architect~~ Engineer will serve as the Initial Decision Maker pursuant to Article 15 of AIA Document ~~A201–2017,~~ A201, unless the parties appoint below another individual, not a party to this Agreement, to serve as the Initial Decision Maker.

...

N/A

...

For any ~~Claim subject to, but not resolved by, mediation pursuant to Article 15 of AIA Document A201–2017,~~ Claim, the method of binding dispute resolution shall be as follows:
PAGE 7

~~[ ] Arbitration pursuant to Section 15.4 of AIA Document A201–2017~~

[X] Litigation in a court of competent jurisdiction

~~[ ] Other *(Specify)*~~
§ 6.3 Governing Law and Venue

~~If the Owner and Contractor do not select a method of binding dispute resolution, or do not subsequently agree in writing to a binding dispute resolution method other than litigation, Claims will be resolved by litigation in a court of competent jurisdiction.~~This Agreement shall be governed by the laws of the State of Alabama, and the appropriate venue of any actions arising out of this Agreement shall be a court of proper jurisdiction in Mobile, Alabama.

...

§ 7.1 The Contract may be terminated by the Owner or the Contractor as provided in Article 14 of AIA Document ~~A201–2017.~~A201, General Conditions of the Contract for Construction, including Owner's then-current modifications, a copy of which is incorporated in the contract documents and incorporated by reference herein as a part thereof..

~~**§ 7.1.1** If the Contract is terminated for the Owner's convenience in accordance with Article 14 of AIA Document A201–2017, then the Owner shall pay the Contractor a termination fee as follows:~~
~~*(Insert the amount of, or method for determining, the fee, if any, payable to the Contractor following a termination for the Owner's convenience.)*~~

§ 7.2 The Work may be suspended by the Owner as provided in Article 14 of AIA Document ~~A201–2017.~~A201, General Conditions of the Contract for Construction, including Owner's then-current modifications, a copy of which is incorporated in the contract documents and incorporated by reference herein as a part thereof.

Additions and Deletions Report for AIA Document A101 – 2017. Copyright © 1915, 1918, 1925, 1937, 1951, 1958, 1961, 1963, 1967, 1974, 1977, 1987, 1991, 1997, 2007 and 2017>. All rights reserved. "The American Institute of Architects," "American Institute of Architects," "AIA," the AIA Logo, and "AIA Contract Documents" are trademarks of The American Institute of Architects. This draft was produced at 15:10:35 ET on 10/02/2023 under Order No.3104238820 which expires on 06/30/2024, is not for resale, is licensed for one-time use only, and may only be used in accordance with the AIA Contract Documents® Terms of Service. To report copyright violations, e-mail docinfo@aiacontracts.com.
User Notes:

(1718960944)

...

§ 8.1 Where reference is made in this Agreement to a provision of AIA Document ~~A201–2017~~ A201 or another Contract Document, the reference refers to that provision as amended or supplemented by other provisions of the Contract Documents. A copy of such amended, revised or supplemental provision is incorporated in the contract documents and hereby incorporated by reference herein as a part thereof.

...

Director, REAM
P. O. Box 1827
Mobile, Alabama 36633-1827

...

§ 8.4 Neither the Owner's nor the Contractor's representative shall be changed without ten (10) days' prior notice to the other party.

...

§ 8.5.1 The Owner and the Contractor shall purchase and maintain insurance as set forth ~~in AIA Document A101™–2017, Standard Form of Agreement Between Owner and Contractor where the basis of payment is a Stipulated Sum, Exhibit A, Insurance and Bonds, and elsewhere in the Contract Documents.~~below:
The Contractor shall purchase and maintain from a company or companies lawfully authorized to do business in the jurisdiction in which the Project is located such insurance as will protect the Contractor from claims set forth below which may arise out of or result from the Contractor's operations be by the Contractor or by a Subcontractor or by anyone directly or indirectly employed by any of them, or by anyone for whose acts any of them may be liable:

.1 Claims under workers' compensation, disability benefit and other similar employee benefit acts that are applicable to the Work to be performed;
.2 Claims for damages because of bodily injury, occupational sickness or disease, or death of the Contractor's employees;
.3 Claims for damages because of bodily injury, sickness or disease, or death of any person other than the Contractor's employees;
.4 Claims for damages insured by usual personal injury liability coverage;
.5 Claims for damages, because of injury to or destruction of tangible property, including loss of use resulting therefrom;
.6 Claims for damages because of bodily injury, death of a person or property damage arising out of ownership, maintenance or use of a motor vehicle;
.7 Claims for bodily injury or property damage arising out of completed operations; and
.8 Claims involving contractual liability insurance applicable to the Contractor's obligations under Section 3.18 of the General Conditions of the Contract for Construction.

The Contractor shall take out and maintain during the life of the Contract no less than the following amounts of insurance with the City of Mobile named as an additional insured. Contractor shall submit a Certificate of Insurance. Insurance companies listed as the "Companies Affording Coverage" shall be authorized by the Secretary of the State of Alabama. Insurance produced out of the State of Alabama must be signed or counter signed by a licensed Agent of Alabama, with the Agent's name, address and telephone number typed or printed on the face of the Certificate of Insurance.

.1 Workmen's Compensation Insurance: - Statutory-amount and coverage as required by all applicable laws, rules or regulations of the State of Alabama and the United States of America, Including the U. S. Longshore and Harbor Workers Act and the Jones Act, if applicable.

.2 Employee's Liability Insurance shall be provided for limits of liability not less than:

Additions and Deletions Report for AIA Document A101 – 2017. Copyright © 1915, 1918, 1925, 1937, 1951, 1958, 1961, 1963, 1967, 1974, 1977, 1987, 1991, 1997, 2007 and 2017>. All rights reserved. "The American Institute of Architects," "American Institute of Architects," "AIA," the AIA Logo, and "AIA Contract Documents" are trademarks of The American Institute of Architects. This draft was produced at 15:10:35 ET on 10/02/2023 under Order No.3104238820 which expires on 06/30/2024, is not for resale, is licensed for one-time use only, and may only be used in accordance with the AIA Contract Documents® Terms of Service. To report copyright violations, e-mail docinfo@aiacontracts.com.
User Notes:

(1718960944)

A. Bodily Injury by Accident $1,000,000 each accident

B. Bodily Injury by Disease $1,000,000 each employee

C. Bodily Injury by Disease $1,000,000 each policy

.3 United States Longshoreman's Harbor Worker's Act.

.4 Jones Act Coverage (if applicable) placed either in the Workers Compensation or through the Marine General Liability.

.5 The Contractor shall provide Broad Form (commonly termed Comprehensive) General Liability Insurance (including premises-product-completed operations, independent contractors, and blanket contractual liability), specifically covering the obligations assumed by the Contractor for limits of liability not less than:

A. Bodily Injury $1,000,000 each person
$1,000,000 each occurrence
B. Property Damage $1,000,000 each occurrence; or
C. Bodily Injury and
Property Damage $1,000,000 combined single limit

.6 Such comprehensive policy shall include the following:

A. All liability of the Contractor, for the Contractor's Direct Operations.
B. Subcontractor's Operations.
C. Completed Operations Cover, thereby meaning any loss which shall occur after the contract has been completed, but which can be traced back to the Contract.
D. General Aggregate Limit of $2,000,000 shall apply on a "Per Project" Basis.
E. Contractual Liability, meaning thereby; any risk assumed by the Contractor under Hold Harmless Agreements or any other assumption of liability, but specifically items 11.1.1.8.3G herein below
F. Broad Form Property damage Coverage, including Completed Operations.
G. Personal Injury Liability, with employee's exclusions removed.
H. Explosion and Collapse Hazard:
Included or X Not Applicable.
I. Underground Hazard:
Included or X Not Applicable.

J. Marine General Liability shall include Premises and Operations, Personal and Advertising Injury, Products and Completed Operations, Protection and Indemnity including vessel and crew (if applicable).

K. Deletion of watercraft exclusion with respect to non-owned vessels and contractual Liability for watercraft exposure not covered by Protection and Indemnity policy.

L. The Marine General Liability policy must include an endorsement to cover "Sudden And Accidental Pollution."

.7 The Contractor shall carry for himself and shall require that all Subcontractors and all Owners of Automobiles or trucks rented or hired on the contract carry, until the Contracts is completed, Comprehensive Automobile Liability Coverage for Bodily Injury and property. Damage for any auto in amounts not less than the minimum amounts as indicated. The Contractor and Subcontractor shall also carry for themselves insurance for all non-owned and hired automobile at the limits of liability as indicated below:

A. Bodily Injury $1,000,000 each person

Additions and Deletions Report for AIA Document A101 – 2017. Copyright © 1915, 1918, 1925, 1937, 1951, 1958, 1961, 1963, 1967, 1974, 1977, 1987, 1991, 1997, 2007 and 2017>. All rights reserved. "The American Institute of Architects," "American Institute of Architects," "AIA," the AIA Logo, and "AIA Contract Documents" are trademarks of The American Institute of Architects. This draft was produced at 15:10:35 ET on 10/02/2023 under Order No.3104238820 which expires on 06/30/2024, is not for resale, is licensed for one-time use only, and may only be used in accordance with the AIA Contract Documents® Terms of Service. To report copyright violations, e-mail docinfo@aiacontracts.com.
User Notes:

(1718960944)

$1,000,000 each occurrence

B. Property damage $1,000,000 each occurrence; or,

C. Bodily Injury and Property damage $1,000,000 combined single limit

.8 Umbrella/Excess Liability: $2,000,000 combined single limit each occurrence for bodily injury and/or property damage

.9 Builder's Risk Coverage (Property Insurance): The Contractor shall carry for the Owner, himself, and all Subcontractors a Builder's Risk Policy to cover the full amount of the Contract during construction, fabrication or erection of any equipment.

A. The Contractor shall purchase and maintain, in a company or companies lawfully authorized to do business in the jurisdiction in which the Project is located, property insurance written on a builder's risk "all-risk" or equivalent policy form in the amount of the initial Contract Sum, plus value of subsequent Contract Modifications and cost of materials supplied or installed by others, comprising total value for the entire Project at the site on a replacement cost basis. Such property insurance shall be maintained, unless otherwise provided in the Contract Documents or otherwise agreed in writing by all persons and entities who are beneficiaries of such insurance, until final payment has been made as provided in Section 9.10 or until no person or entity other than the Owner has an insurable interest in the property, whichever is later. This insurance shall include interests of the Owner, the Contractor, Subcontractors, Sub-subcontractors, and the Design Professionals in the Project.

B. Property insurance shall be on an "all-risk" or equivalent policy form and shall include, without limitation, insurance against the perils of fire (with extended coverage) and physical loss or damage including, without duplication of coverage, theft, vandalism, malicious mischief, collapse, windstorm, falsework, testing and startup, temporary buildings and debris removal including demolition occasioned by enforcement of any applicable legal requirements, and shall cover reasonable compensation for Architect's and Contractor's services and expenses required as a result of such insured loss.

C. If the property insurance requires deductibles, the Contractor shall pay costs not covered because of such deductibles. Deductibles shall be limited to a maximum of $2,500.00 unless the loss is caused by windstorm; then deductible shall be a maximum of three percent (3%) of the insured value.

D. This property insurance shall cover the full value of equipment, material, and other portions of the Work stored off the site, and also portions of the Work in transit. There shall be no limits on the value of loss per occurrence.

E. A named storm endorsement is required. The deductible shall be a maximum of three percent (3%) of the insured value.

.10 A Surety authorized to do business in the State of Alabama shall furnish the required Insurance.

.11 The standard ACORD™ format shall be provided. The ACORD™ Certificate must be signed or countersigned by a Licensed Resident Agent of the State of Alabama and the agent's name, address and telephone number must appear on the face of the certificate.

.12 The Surety must have a minimum rating of A/Class VI as reported in the latest issue of Best's Key Rating Guide Property-Casualty, published by Alfred M. Best Company, Inc. if the bid price exceeds $50,000.00.

.13 "In Rem" endorsement.

Additions and Deletions Report for AIA Document A101 – 2017. Copyright © 1915, 1918, 1925, 1937, 1951, 1958, 1961, 1963, 1967, 1974, 1977, 1987, 1991, 1997, 2007 and 2017>. All rights reserved. "The American Institute of Architects," "American Institute of Architects," "AIA," the AIA Logo, and "AIA Contract Documents" are trademarks of The American Institute of Architects. This draft was produced at 15:10:35 ET on 10/02/2023 under Order No.3104238820 which expires on 06/30/2024, is not for resale, is licensed for one-time use only, and may only be used in accordance with the AIA Contract Documents® Terms of Service. To report copyright violations, e-mail docinfo@aiacontracts.com.
User Notes:

(1718960944)

The insurance shall be written for not less than limits of liability specified in the Contract Documents or required by law, whichever coverage is greater. Coverages, whether written on an occurrence or claims-made basis, shall be maintained without interruption from the date of commencement of the Work until the date of final payment and termination of any coverage required to be maintained after final payment, and, with respect to the Contractor's completed operations coverage, until the expiration of the period for correction of Work or for such other period for maintenance of completed operations coverage as specified in the Contract Documents.

Certificates of insurance acceptable to the Owner shall be filed with the Owner within ten (10) calendar days from date of issuance of contract forms for execution. Contractor shall deliver to the City of Mobile, certificates of insurance certifying the existence and limits of the insurance coverages along with separate policy endorsements. Contractor shall also be responsible for delivering policy renewal certificates to the City of Mobile, and thereafter upon renewal or replacement of each required policy of insurance. These certificates and the insurance policies shall contain a provision that coverages afforded under the policies will not be cancelled subject to non-renewal nor material change, or allowed to expire without at least thirty (30) days' (except ten (10) days from non-payment) prior written notice has been given to the Owner. An additional certificate evidencing continuation of liability coverage, including coverage for completed operations, shall be submitted with the final Application for Payment and thereafter upon renewal or replacement of such coverage until the expiration of the time. Information concerning reduction of coverage on account of revised limits or claims paid under the General Aggregate, or both, shall be furnished by the Contractor with reasonable promptness.

All policies of insurance, except worker's compensation, shall be endorsed to provide that all such insurances are primary and non-contributing with any other insurance maintained by the City of Mobile and endorsed to waive rights of subrogation in favor of the City of Mobile.

The Contractor shall cause the commercial liability coverage required by the Contract Documents to include (1) the Owner, the Architect and the Architect's Consultants as additional insureds for claims caused in whole or in part by the Contractor's negligent acts or omissions during the Contractor's operations; and (2) the Owner as an additional insured for claims caused in whole or in part by the Contractor's negligent acts or omissions during the Contractor's completed operations.

§ 8.5.2 The Contractor shall provide bonds as set forth ~~in AIA Document A101™–2017 Exhibit A, and elsewhere in the Contract Documents.~~below:
Contractor shall furnish bonds covering faithful performance of the Contract and payment of obligations arising thereunder.

Upon the request of any person or entity appearing to be a potential beneficiary of bonds covering payment of obligations arising under the Contract, the Contractor shall promptly furnish a copy of the bonds or shall authorize a copy to be furnished.

The Labor and Material Payment Bond and the Performance Bond shall each be for one hundred percent (100%) of the Contract Sum.

1. Bond shall be submitted with the executed agreement on provided form(s).

2. Power of Attorney is required for both bonds.

3. A Surety authorized to do business in the State of Alabama shall furnish both bonds.

4. A Surety licensed to do business in the State of Alabama must execute the bonds.

5. The Surety must have a minimum rating of A/Class VI as reported in the latest issue of Best's Key Rating Guide Property-Casualty, published by Alfred M. Best Company, Inc., if the bid price exceeds $50,000.00.

Additions and Deletions Report for AIA Document A101 – 2017. Copyright © 1915, 1918, 1925, 1937, 1951, 1958, 1961, 1963, 1967, 1974, 1977, 1987, 1991, 1997, 2007 and 2017>. All rights reserved. "The American Institute of Architects," "American Institute of Architects," "AIA," the AIA Logo, and "AIA Contract Documents" are trademarks of The American Institute of Architects. This draft was produced at 15:10:35 ET on 10/02/2023 under Order No.3104238820 which expires on 06/30/2024, is not for resale, is licensed for one-time use only, and may only be used in accordance with the AIA Contract Documents® Terms of Service. To report copyright violations, e-mail docinfo@aiacontracts.com.
User Notes:

(1718960944)

6. The Surety company shall be required to execute AIA Document G-707, "Consent of Surety to Final Payment" prior to Final Payment being made to the Contractor.

§ 8.6 ~~Notice in electronic format, pursuant to Article 1 of AIA Document A201™–2017, may be given in accordance with AIA Document E203™–2013, Building Information Modeling and Digital Data Exhibit, if completed, or as otherwise set forth below:~~
~~*(If other than in accordance with AIA Document E203–2013, insert requirements for delivering notice in electronic format such as name, title, and email address of the recipient and whether and how the system will be required to generate a read receipt for the transmission.)*~~

Indemnification:
The Contractor shall indemnify, defend and hold harmless City and its officers, elected officials, agents, representatives, and employees in respect of any and all claims, injuries, losses, diminution in value, damages, liabilities, whether or not currently due, and related expenses (including without limitation, settlement costs and any legal or other expenses for investigating or defending any actions or threatened actions) arising from or in connection with the contractor's performance under this agreement, including but not limited to, environmental laws, regulations, orders and decrees of whatever character or nature and damage or injury to persons or property. Contractor hereby confirms and agrees that Contractor is not a 'design professional' as defined in Alabama Act 2021-318, and not required to carry professional liability insurance for the performance or obligations of this contract.

§ 8.7 Other ~~provisions:~~Provisions:
Contractor shall provide a minimum one (1) year warranty from the date of substantial completion of all Labor and Materials for the Work covered by this contract, unless otherwise specified. Labor and Material warranties required by other sections of the construction document shall not conflict with this provision. The most stringent warranty provision shall apply.

§ 8.8 Force Majeure:
In the event that either party hereto shall be delayed or hindered in or prevented from the performance of any act required hereunder by reason of strikes, lockouts, labor troubles, inability to procure materials, failure of power, restrictive governmental laws or regulations, riots, insurrection, war, Act of God, or other reason of a like nature not the fault of the party delayed in performing work or doing acts required under the terms of this Agreement, then performance of such act shall be excused for the period of the delay and the period for the performance of any such act shall be extended for a period equivalent to the period of such delay.

PAGE 11

.2 AIA Document ~~A101™–2017, Exhibit A, Insurance and Bonds~~
~~.3 AIA Document A201™–2017,~~ A201, General Conditions of the Contract for ~~Construction~~
~~.4 AIA Document E203™–2013, Building Information Modeling and Digital Data Exhibit, dated as indicated below:~~
~~(Insert the date of the E203–2013 incorporated into this Agreement.)~~Construction, including Owner's then-current modifications, a copy of which is incorporated in the contract documents and incorporated by reference herein as a part thereof.

~~.5 Drawings~~
.3 Drawings

PAGE 12

Lavretta

CS100	COVER SHEET	10/16/2023
LS010	OVERALL SITE PLAN	10/16/2023
EC100	EXISTING CONDITIONS	10/16/2023
LD100	LANDSCAPE DEMOLITION PLAN	10/16/2023
LS100	LANDSCAPE SITE PLAN	10/16/2023
LG100	GRADING AND DRAINAGE PLAN	10/16/2023
LH100	HARDSCAPE PLAN	10/16/2023

Additions and Deletions Report for AIA Document A101 – 2017. Copyright © 1915, 1918, 1925, 1937, 1951, 1958, 1961, 1963, 1967, 1974, 1977, 1987, 1991, 1997, 2007 and 2017>. All rights reserved. "The American Institute of Architects," "American Institute of Architects," "AIA," the AIA Logo, and "AIA Contract Documents" are trademarks of The American Institute of Architects. This draft was produced at 15:10:35 ET on 10/02/2023 under Order No.3104238820 which expires on 06/30/2024, is not for resale, is licensed for one-time use only, and may only be used in accordance with the AIA Contract Documents® Terms of Service. To report copyright violations, e-mail docinfo@aiacontracts.com.
User Notes:

(1718960944)

LH500	HARDSCAPE DETAILS	10/16/2023
LH501	HARDSCAPE DETAILS	10/16/2023
LH502	HARDSCAPE DETAILS	10/16/2023
LH503	HARDSCAPE DETAILS	10/16/2023
LH504	HARDSCAPE DETAILS	10/16/2023
LP100	LANDSCAPE PLANTING PLAN	10/16/2023
LP500	LANDSCAPE PLANTING DETAILS	10/16/2023
C1.1	CIVIL GRADING & DRAINAGE PLAN	10/16/2023
C1.2	CIVIL DETAILS	10/16/2023
C1.3	CIVIL NOTES	10/16/2023
E100	ELECTRICAL LEGEND AND SPECIFICATIONS	10/16/2023
E200	ELECTICAL SITE PLAN - EXISTING	10/16/2023
E300	ELECTRICAL SITE PLAN - NEW WORK	10/16/2023
E400	ENLARGED PICKLEBALL COURT LIGHTING - NEW WORK	10/16/2023
E500	ENLARGED PAVILION LIGHTED - POWER - NEW WORK	10/16/2023
E600	NORTH PARKING LOT LIGHTING - NEW WORK	10/16/2023
E700	SOUTH PARKING LOT LIGHTING - NEW WORK	10/16/2023
E800	ELECTRICAL DETAILS	10/16/2023
E900	ELECTRICAL DETAILS	10/16/2023
Hillsdale		
CS100	COVER SHEET	10/16/2023
EC100	EXISTING CONDITIONS	10/16/2023
LD100	LANDSCAPE DEMOLITION PLAN	10/16/2023
LS100	LANDSCAPE SITE PLAN	10/16/2023
LG100	LANDSCAPE GRADING PLAN	10/16/2023
LH100	HARDSCAPE PLAN	10/16/2023
LH500	HARDSACPE DETAILS	10/16/2023
LH501	HARDSCAPE DETAILS	10/16/2023
LH502	HARDSCAPE DETAILs	10/16/2023
LH503	HARDSCAPE DETAILS	10/16/2023
LH504	HARDSCAPE DETAILS	10/16/2023
E100	ELECTRICAL LEGEND AND SPECIFICATIONS	10/16/2023
E200	EXISTING OVERALL PLAN - ELECTRICAL	10/16/2023
E201	EXISTING PLAN - ENLARGED ELECTRICAL	10/16/2023
E300	NEW WORK OVERALL PLAN - ELECTRICAL	10/16/2023
E301	ENLARGED NEW WORK PLAN - ELECTRICAL	10/16/2023
E400	ELECTRICAL DETAILS	10/16/2023
E401	ELECTRICAL DETAILS	10/16/2023

~~.6~~ .4 Specifications

~~Section~~	~~Title~~	~~Date~~	~~Pages~~

Section	Title	Date
DIVISION 1:	GENERAL REQUIREMENTS	10/16/2023
SECTION 01010	SCOPE OF WORK	10/16/2023
SECTION 01050	FIELD ENGINEERING	10/16/2023
SECTION 01210	ALLOWANCES	10/16/2023
SECTION 01220	UNIT PRICES	10/16/2023
SECTION 01230	ALTERNATES	10/16/2023
SECTION 01251	PRE-BID SUBSTITUTION PROCEDURES	10/16/2023
SECTION 01260	CONTRACT MODIFICATION PROCEDURES	10/16/2023
SECTION 01290	PAYMENT PROCEDURES	10/16/2023
SECTION 01310	PROJECT MANAGEMENT AND COORDINATION SUBMITTAL PROCEDURES	10/16/2023

Additions and Deletions Report for AIA Document A101 – 2017. Copyright © 1915, 1918, 1925, 1937, 1951, 1958, 1961, 1963, 1967, 1974, 1977, 1987, 1991, 1997, 2007 and 2017>. All rights reserved. "The American Institute of Architects," "American Institute of Architects," "AIA," the AIA Logo, and "AIA Contract Documents" are trademarks of The American Institute of Architects. This draft was produced at 15:10:35 ET on 10/02/2023 under Order No.3104238820 which expires on 06/30/2024, is not for resale, is licensed for one-time use only, and may only be used in accordance with the AIA Contract Documents® Terms of Service. To report copyright violations, e-mail docinfo@aiacontracts.com.
User Notes:

(1718960944)

SECTION 01330	QUALITY CONTROL TESTING PROCEDURES	10/16/2023
SECTION 01401	CONSTRUCTION FACILITIES AND	10/16/2023
SECTION 01500	TEMPORARY CONTROLS	10/16/2023
	EXECUTION REQUIREMENTS	
SECTION 01700	CUTTING AND PATCHING	10/16/2023
SECTION 01731	SELECTIVE DEMOLITION	10/16/2023
SECTION 01732	SUBSTITUTION PROCEDURES	10/16/2023
SECTION 01735	CLOSEOUT PROCEDURES	10/16/2023
SECTION 01770	OPERATION AND MAINTENANCE DATA	10/16/2023
SECTION 01782	PROJECT RECORD DOCUMENTS	10/16/2023
SECTION 01783		10/16/2023
	SITE WORK	
DIVISION 2:	SELECTIVE SITE DEMOLITION	10/16/2023
SECTION 02070	SITE CLEARING	10/16/2023
SECTION 02230	EARTHWORK	10/16/2023
SECTION 02300	PICKLEBALL COURT SURFACING	10/16/2023
SECTION 02462	ASPHALTIC CONCRETE PAVING	10/16/2023
SECTION 02513	CEMENT CONCRETE PAVEMENT	10/16/2023
SECTION 02751	CHAIN LINK FENCES AND GATES	10/16/2023
SECTION 02821	LANDSCAPING	10/16/2023
SECTION 02900	CAST-IN PLACE CONCRETE	10/16/2023
SECTION 03300		10/16/2023

~~.7~~ .5 Addenda, if any:

~~Number~~ ~~Date~~ ~~Pages~~

Number **Date**

PAGE 13

~~.8~~ .6 Other Exhibits:

...

~~[ ] AIA Document E204™–2017, Sustainable Projects Exhibit, dated as indicated below:~~
~~*(Insert the date of the E204-2017 incorporated into this Agreement.)*~~

_____

~~[ ] The Sustainability Plan:~~

§ 9.2

~~Title~~ ~~Date~~ ~~Pages~~

~~[ ]~~ Supplementary and other Conditions of the Contract:

...

N/A

~~.9 Other documents, if any, listed below:~~ **§ 9.2.1** Other documents, if any, listed below:

(List here any additional documents that are intended to form part of the Contract Documents. AIA Document A201™–2017 provides that the advertisement or invitation to bid, Instructions to Bidders, sample forms, the Contractor's bid or proposal, portions of Addenda relating to bidding or proposal requirements, and other information furnished by the Owner in anticipation of receiving bids or

Additions and Deletions Report for AIA Document A101 – 2017. Copyright © 1915, 1918, 1925, 1937, 1951, 1958, 1961, 1963, 1967, 1974, 1977, 1987, 1991, 1997, 2007 and 2017>. All rights reserved. "The American Institute of Architects," "American Institute of Architects," "AIA," the AIA Logo, and "AIA Contract Documents" are trademarks of The American Institute of Architects. This draft was produced at 15:10:35 ET on 10/02/2023 under Order No.3104238820 which expires on 06/30/2024, is not for resale, is licensed for one-time use only, and may only be used in accordance with the AIA Contract Documents® Terms of Service. To report copyright violations, e-mail docinfo@aiacontracts.com.
User Notes:

(1718960944)

proposals, are not part of the Contract Documents unless enumerated in this Agreement. Any such documents should be listed here only if intended to be part of the Contract Documents.)

BIDDING AND CONTRACT REQUIREMENTS

Section 00100	Invitation to Bid
Section 00200	Instructions to Bidders-AIA Document A701-2018
Section 00300	Supplementary Instructions to Bidders
Section 00400	Lavretta Park - Bid For
	Hillsdale Park - Bid Form
	Lavretta Park - Accounting of Sales Tax Form C-3A
	Hillsdale Park - Accounting of Sales Tax Form C-3A
	Lavretta Park - Supplier Diversity Subcontracting and Major Supplier Plan
	Hillsdale Park - Supplier Diversity Subcontracting and Major Supplier Plan
Section 00500	Standard Form of Agreement Between Owner and Contractor AIA Document A101
Section 00600	Bonds, Certificates and Affidavits
	Performance Bond
	Labor and Material Payment Bond
	E-Verify Documentation (Sample)
	Application and Certificate for Payment-AIA Document G702and G703 with DBE Utilization Report
	Certificate of Substantial Completion-AIA Document G704
	Contractor's Affidavit of Payment of Debts and Claims-AIA Document G706
	Contractor's Affidavit of Release of Liens-AIA Document G706A
	Consent of Surety to Final Payment-AIA Document G707
	Request for Taxpayer Identification Number and Certification W9 Tax Form and City of Mobile Vendor Information Form
Section 00700	General Conditions of the Contract for Construction-AIA Document A201

§ 9.2.2 Best Management Practices (BMPs):
The Contractor shall be responsible for providing, implementing and maintaining BMPs for sediment and erosion control in full compliance with all applicable Local, State and Federal Codes and Ordinances throughout the contract period. All Work shall be in accordance with the Clean Water Act; the Alabama Water Pollution Control Act; the current version of the Alabama Handbook for Erosion Control, Sediment Control Stormwater Management on Construction sites and Urban Areas; and the current version of the Mobile, Alabama City Code Chapter 17 Stormwater Management and Flood Control. All Waste water with oils, grease, paint, mortar, etc., shall be properly contained and disposed of.

§ 9.2.3 Contractor shall comply with all Federal, State and local laws concerning nondiscrimination, including but not limited to City of Mobile Ordinance No. 14-034 which requires, *inter alia*, that all contractors performing work for the City of Mobile not discriminate on the basis of race, creed, color, national origin or disability, require that all subcontractors they engage do the same, and make every reasonable effort to assure that fifteen percent of the work performed under contract be awarded to socially and economically disadvantaged individuals and business entities.

§ 9.2.4 By signing this contract, the contracting parties affirm, for the duration of the agreement, that they will not violate federal immigration law or knowingly employ, hire for employment, or continue to employ an unauthorized alien within the State of Alabama. Furthermore, a contracting party found to be in violation of this provision shall be deemed in breach of the agreement and shall be responsible for all damages resulting therefrom.

§ 9.2.5 Public Contracts with Entities Engaging in certain Boycott Activities:
By signing this contract, the Contractor further represents and agrees that it is not currently engaged in, nor will it engage in, any boycott of a person or entity based in or doing business with a jurisdiction with which the State of Alabama can enjoy open trade.

Additions and Deletions Report for AIA Document A101 – 2017. Copyright © 1915, 1918, 1925, 1937, 1951, 1958, 1961, 1963, 1967, 1974, 1977, 1987, 1991, 1997, 2007 and 2017>. All rights reserved. "The American Institute of Architects," "American Institute of Architects," "AIA," the AIA Logo, and "AIA Contract Documents" are trademarks of The American Institute of Architects. This draft was produced at 15:10:35 ET on 10/02/2023 under Order No.3104238820 which expires on 06/30/2024, is not for resale, is licensed for one-time use only, and may only be used in accordance with the AIA Contract Documents® Terms of Service. To report copyright violations, e-mail docinfo@aiacontracts.com.
User Notes:

(1718960944)

§ 9.2.6 Severability Clause:

In case any one or more of the provisions contained in this Agreement shall for any reason be held to be invalid, illegal or unenforceable in any respect, such invalidity, illegality or unenforceability shall not affect any other provisions of this Agreement, but this Agreement shall be construed as if such invalid or illegal or unenforceable provision had never been contained herein. Upon such determination that any term or other provision is invalid, illegal or unenforceable, the court or other tribunal making such determination is authorized and instructed to modify this Agreement so as to effect the original intent of the parties as closely as possible so that the transactions and agreements contemplated herein are consummated as originally contemplated to the fullest extent possible.

§ 9.2.7 Non-Agency Clause:

Contractor, in the performance of its operations and obligations hereunder, shall not be deemed to be an agent of City but shall be deemed to be an independent Contractor in every respect and shall take all steps at its own expense, as City may from time to time request, to indicate that it is an independent Contractor. City does not and will not assume any responsibility for the means by which or the manner in which the services by Contractor provided for herein are performed, but on the contrary, Contractor shall be wholly responsible therefore.

REMAINDER OF PAGE INTENTIONALLY LEFT BLANK

Additions and Deletions Report for AIA Document A101 – 2017. Copyright © 1915, 1918, 1925, 1937, 1951, 1958, 1961, 1963, 1967, 1974, 1977, 1987, 1991, 1997, 2007 and 2017>. All rights reserved. "The American Institute of Architects," "American Institute of Architects," "AIA," the AIA Logo, and "AIA Contract Documents" are trademarks of The American Institute of Architects. This draft was produced at 15:10:35 ET on 10/02/2023 under Order No.3104238820 which expires on 06/30/2024, is not for resale, is licensed for one-time use only, and may only be used in accordance with the AIA Contract Documents® Terms of Service. To report copyright violations, e-mail docinfo@aiacontracts.com.
User Notes:

(1718960944)

This Agreement entered into as of the day and year first written above.

	Legal Name of Party to Contract:
City of Mobile	Contractor:
OWNER *(Signature)*	**CONTRACTOR** *(By Signature)*
William S. Stimpson, Mayor	
	(Printed name and title)
OWNER ~~*(Signature)*~~	
(Printed name and title)	

ATTEST:

City Clerk

STATE OF ALABAMA
COUNTY OF MOBILE
Before me, the undersigned a Notary Public in and for said County and State, personally appeared
as President of , Inc. and after being
duly sworn, did depose and say that he, as such officer and with full authority, signed the above and
foregoing voluntarily as the act of said corporation on the day the same bears date.
Sworn to and subscribed for me this _____ day of _____, 20_____.

NOTARY PUBLIC
My Commission Expires: _____

Additions and Deletions Report for AIA Document A101 – 2017. Copyright © 1915, 1918, 1925, 1937, 1951, 1958, 1961, 1963, 1967, 1974, 1977, 1987, 1991, 1997, 2007 and 2017>. All rights reserved. "The American Institute of Architects," "American Institute of Architects," "AIA," the AIA Logo, and "AIA Contract Documents" are trademarks of The American Institute of Architects. This draft was produced at 15:10:35 ET on 10/02/2023 under Order No.3104238820 which expires on 06/30/2024, is not for resale, is licensed for one-time use only, and may only be used in accordance with the AIA Contract Documents® Terms of Service. To report copyright violations, e-mail docinfo@aiacontracts.com.
User Notes:

(1718960944)

Certification of Document's Authenticity

AIA® Document D401™ – 2003

I, , hereby certify, to the best of my knowledge, information and belief, that I created the attached final document simultaneously with its associated Additions and Deletions Report and this certification at 15:10:35 ET on 10/02/2023 under Order No. 3104238820 from AIA Contract Documents software and that in preparing the attached final document I made no changes to the original text of AIA® Document A101™ – 2017, Standard Form of Agreement Between Owner and Contractor where the basis of payment is a Stipulated Sum, other than those additions and deletions shown in the associated Additions and Deletions Report.

_____

(Signed)

_____

(Title)

_____

(Dated)

AIA Document D401 – 2003. Copyright © 1992 and 2003. All rights reserved. "The American Institute of Architects," "American Institute of Architects," "AIA," the AIA Logo, and "AIA Contract Documents" are trademarks of The American Institute of Architects. This document was produced at 15:10:35 ET on 10/02/2023 under Order No.3104238820 which expires on 06/30/2024, is not for resale, is licensed for one-time use only, and may only be used in accordance with the AIA Contract Documents® Terms of Service. To report copyright violations, e-mail docinfo@aiacontracts.com.
User Notes:

(1718960944)

SECTION 00600

BONDS, CERTIFICATES AND AFFIDAVITS

PART 1 GENERAL

This section includes the Bond Forms and Certificates that are to be used on this Project. No other forms will be accepted. Forms may be obtained from the Architectural Engineering Department, City of Mobile, telephone number 251-208-7454.

1.1 FORMS

A. PERFORMANCE BOND. Owner's modified Performance Bond form.

B. LABOR AND MATERIAL PAYMENT BOND. Owner's modified Payment Bond form.

C. E-Verify Documentation (Sample)

D. APPLICATION AND CERTIFICATION FOR PAYMENT - AIA Document G702 and AIA Document G703 and DBE Utilization Report

E. CERTIFICATE of SUBSTANTIAL COMPLETION – AIA Document G704-2017

F. CONTRACTOR'S AFFIDAVIT OF PAYMENT OF DEBTS AND CLAIMS - AIA Document G706

G. CONTRACTOR'S AFFIDAVIT OF RELEASE OF LIENS - AIA Document G706A.

H. CONSENT OF SURETY TO FINAL PAYMENT - AIA Document G707

I. Request for Taxpayer Identification Number and Certification, W-9 Form, and City of Mobile Vendor Information Form

PERFORMANCE BOND

Any singular reference to Contractor, Surety, Owner or other Party shall be considered plural where applicable.

KNOW ALL MEN BY THESE PRESENTS: That the Contractor, _____, _____,_____, hereinafter called the Principal, and _____ _____, hereinafter called the Surety, are held and firmly bound unto the **City of Mobile, P. O. Box 1827, Mobile, AL 36633**, hereinafter called the Owner, in the penal sum of _____ and xx/100 Dollars ($_____.00) for payment of which we bind ourselves, our heirs, executors, administrators, successors, and assigns for the faithful performance of a certain written Contract dated the _____ day of _____, 2023 entered into between the Principal and the City of Mobile for furnishing all labor, material, equipment and insurance and performing all Work required to properly complete Lavretta Park – Pickleball Court, 200 West Parkway Drive, Mobile, Alabama 36608 – PR-073-22 and Hillsdale Park – Pickleball Court, 558 East Felhorn Road, Mobile, Alabama 36608 – PR-041-22, a copy of which said Contract is incorporated herein by reference and is made a part hereof as if fully copied herein.

NOW, THEREFORE, the condition of this obligation is such that if the Principal shall faithfully perform the terms and conditions of the Contract in all respects on its part and shall fully pay all obligations incurred in connection with the performance of such Contract on account of labor and materials used in connection therewith, and all such other obligations of every form, nature and character, and shall save harmless the Owner from all and any liability of every nature, kind and character which may be incurred in connection with the performance or fulfillment of such Contract or other such and liability resulting from negligence or otherwise on the part of such Principal and further save harmless the Owner from all cost and damage which may be suffered by reason of the failure to fully and completely perform said contract and shall fully reimburse and repay the Owner for all expenditures of every kind, character, and description which may be incurred by the Owner in making good any and every default which may exist on the part of the Principal in connection with the performance of said Contract; and further that the Principal shall pay all lawful claims of all persons, firms, partnerships, or corporations for all labor performed and material furnished in connection with the performance of the Contract, and that the failure to do so with such persons, firms, partnerships or corporations shall give them a direct obligation; and provided, however, that no suit, action, or proceedings by reason of any default whatever shall be brought on this bond after two years from the date on which the final payment on the Contract falls due, and provided, further, that if any alterations or additions which may be made under the Contract, or in the work to be done under it, or the giving by the Owner of any extensions of time for the performance of the Contract or any other forbearance being expressly waived. This obligation shall remain in full force and effect until the performance of all covenants, terms and conditions herein stipulated and after such performance, it shall become null and void.

In addition to any other legal mode of service, service of summons, and other process in civil actions brought in Mobile County may be had on the Contractor or the Surety on the bond by leaving a copy of the summons and complaint or other pleading or process with the Mayor of the City of Mobile which shall bind the principal Contractor and Surety to the mode of service above described and that the service shall be the same as personal service on the contractor or surety. This Bond is given pursuant to the terms of Alabama Code, Title 39-1-1, et. al., As Amended.

EXECUTED IN FOUR (4) COUNTERPARTS.

SIGNED, SEALED AND DELIVERED this ____ day of _____, 2023.

CONTRACTOR AS PRINCIPAL
Company: _____
(Corporate Seal)

By: _____
(Signature)

Name and Title: _____

SURETY
Company:_____
(Corporate Seal)

By: _____
(Signature)

Name and Title: _____

Resident Agent: _____
(Signature)

Name and Title: _____
Company Name:_____
Address: _____
_____
Phone and Fax: _____

Owner's Representative: Cassie Boatwright
REAM Director
PO Box 1827
Mobile, AL 36633
251-208-7454

LABOR AND MATERIAL PAYMENT BOND

Any singular reference to Contractor, Surety, Owner or other Party shall be considered plural where applicable.

KNOW ALL MEN BY THESE PRESENTS: That the Contractor**,** _____, _____, _____ , as Principal, and _____ _____, as Surety, are held and firmly bound unto the **City of Mobile, P. O. Box 1827, Mobile, AL 36633** (hereinafter called the "Obligee") in the penal sum of _____ and xx/100 ($_____.00) lawful money of the United States, for the payment of which sum well and truly to be made we bind ourselves, our heirs, personal representatives, successors, and assigns, jointly and severally, firmly by these presents.

WHEREAS, said Principal has entered into a certain Contract with said Obligee, dated the ____ day of _____, 2021 (hereinafter called the "Contract") for furnishing all labor, material, equipment and insurance and perform all work required to properly complete Lavretta Park – Pickleball Court, 200 West Parkway Drive, Mobile, Alabama 36608 – PR-073-22 and Hillsdale Park – Pickleball Court, 558 East Felhorn Road, Mobile, Alabama 36608 – PR-041-22, which**, THEREFORE, THE CONDITION OF THIS OBLIGATION IS SUCH** that if said Principal and all subcontractors to whom any portion of work provided for in said Contract is sublet and all assignees of said Principal and of such subcontractors shall promptly make payments to all persons supplying him or them with labor, materials or supplies for or in the prosecution of the work provided for in such Contract, or in any amendment or extension of or additions to said Contract, and for the payment of reasonable attorney's fees, incurred by the claimant or claimants in suits on each bond, then the above obligations shall be void; otherwise to remain in full force and effect.
PROVIDED, however, that this bond is subject to the following conditions and limitations.

(a) Any person, firm or corporation that has furnished labor, materials or supplies for or in the prosecution of the work provided for in said contract shall have a direct right of action against the Principal and Surety on this bond, which right of action shall be asserted in a proceeding instituted in the County in which the work provided for in said Contract is to be performed or in any county in which said Principal and Surety does business. Such right of action shall be asserted in a proceeding instituted in the name of the claimant or claimants for his or their use and benefit against said Principal and Surety or either of them (but not later than one year after the final settlement of said Contract) in which action such claim or claims shall be adjudicated and judgment rendered thereon.

(b) The Principal and Surety hereby designate and appoint _____**Attorney-In-Fact,** as the agent of each of them to receive and accept service of process or other pleading issued or filed in any proceeding instituted on this bond and hereby consent that such service shall be the same as personal service on the Principal and/or Surety. In addition to any other legal mode of service, service of summons, and other process in civil actions brought in Mobile County may be had on the Contractor or the Surety on the bond by leaving a copy of the summons and complaint or other pleading or process with the Mayor of the City of Mobile which shall bind the principal Contractor and Surety to the mode of service above described and that the service shall be the same as personal service on the contractor or surety.

(c) The Surety shall not be liable hereunder for damage or compensation recoverable under any Workmen's Compensation or Employer's Liability Statute.

(d) In no event shall the Surety be liable for a greater sum than the penalty of this bond, or subject to any suit, action or proceeding thereon that is instituted later than two years after the final settlement of said Contract.

(e) This bond is given pursuant to the terms of Alabama Code, Title 39-1-1, et. al., As Amended.

EXECUTED IN FOUR (4) COUNTERPARTS.

SIGNED, SEALED AND DELIVERED this ____ day of _____, 2023

CONTRACTOR AS PRINCIPAL
Company: _____
(Corporate Seal)

By: _____
(Signature)

Name and Title:
_____

SURETY
Company: _____
(Corporate Seal)

By: _____
(Signature)

Name and Title:_____

Resident Agent: _____
(Signature)
Name and Title: _____
Company Name: _____
Address: _____
_____
Phone and Fax: _____

Owner's Representative: Cassie Boatwright
REAM Director
PO Box 1827
Mobile, AL 36633
251-208-7454

Company ID Number:

Approved by:

Employer	
Name (Please Type or Print)	
Signature	Date
Department of Homeland Secu[illegible] Division	
Name (Please Type or P[illegible]	Title
Signature	Date

SAMPLE

E-Verify

Company ID Number:

Information Required for the E-Verify Program	
Information relating to your Company:	
Company Name	
Company Facility Address	
Company Alternate Address	
County or Parish	
Employer Identification Num	
North American Industry Classification Systems Code	
Parent Company	
Number of Employees	
Number of Sites Verified for	

SAMPLE

APPLICATION AND CERTIFICATION FOR PAYMENT

AIA DOCUMENT G702

TO OWNER City of Mobile
P. O. Box 1827
Mobile, Alabama 36633-1827

PROJECT:

APPLICATION NO:

Distribution to:
- [ ] OWNER
- [ ] ARCHITECT
- [ ] CONTRACTOR
- [ ]
- [ ]

PERIOD TO:

FROM CONTRACTOR:

VIA ARCHITECT:

PROJECT NO:

CONTRACT FOR:

CONTRACT DATE:

CONTRACTOR'S APPLICATION FOR PAYMENT

Application is made for payment, as shown below, in connection with the Contract.
Continuation Sheet, AIA Document G703, is attached.

1. ORIGINAL CONTRACT SUM $ _____
2. Net change by Change Orders $ _____
3. CONTRACT SUM TO DATE (Line 1 ± 2) $ _____
4. TOTAL COMPLETED & STORED TO DATE (Column G on G703) $ _____
5. RETAINAGE:
   a. _____ % of Completed Work (Column D + E on G703) $ _____
   b. _____ % of Stored Material (Column F on G703) $ _____
   Total Retainage (Lines 5a + 5b or Total in Column I of G703) $ _____
6. TOTAL EARNED LESS RETAINAGE (Line 4 Less Line 5 Total) $ _____
7. LESS PREVIOUS CERTIFICATES FOR PAYMENT (Line 6 from prior Certificate) $ _____
8. CURRENT PAYMENT DUE $ _____
9. BALANCE TO FINISH, INCLUDING RETAINAGE (Line 3 less Line 6) $ _____

CHANGE ORDER SUMMARY	ADDITIONS	DEDUCTIONS
Total changes approved in previous months by Owner		
Total approved this Month		
TOTALS		
NET CHANGES by Change Order		

The undersigned Contractor certifies that to the best of the Contractor's knowledge, information and belief the Work covered by this Application for Payment has been completed in accordance with the Contract Documents, that all amounts have been paid by the Contractor for Work for which previous Certificates for Payment were issued and payments received from the Owner, and that current payment shown herein is now due.

CONTRACTOR:

By: _____ Date: _____

State of: County of:
Subscribed and sworn to before me this day of
Notary Public:
My Commission expires:

ARCHITECT'S CERTIFICATE FOR PAYMENT

In accordance with the Contract Documents, based on on-site observations and the data comprising the application, the Architect certifies to the Owner that to the best of the Architect's knowledge, information and belief the Work has progressed as indicated, the quality of the Work is in accordance with the Contract Documents, and the Contractor is entitled to payment of the AMOUNT CERTIFIED.

AMOUNT CERTIFIED . . . . . $ _____

(Attach explanation if amount certified differs from the amount applied. Initial all figures on this Application and onthe Continuation Sheet that are changed to conform with the amount certified.)
ARCHITECT:

By: _____ Date: _____

This Certificate is not negotiable. The AMOUNT CERTIFIED is payable only to the Contractor named herein. Issuance, payment and acceptance of payment are without prejudice to any rights of the Owner or Contractor under this Contract.

AIA DOCUMENT G702 · APPLICATION AND CERTIFICATION FOR PAYMENT · 1992 EDITION · AIA · ©1992 THE AMERICAN INSTITUTE OF ARCHITECTS, 1735 NEW YORK AVE., N.W., WASHINGTON, DC 20006-5292

Users may obtain validation of this document by requesting a completed AIA Document D401 - Certification of Document's Authenticity from the Licensee.

CONTINUATION SHEET

AIA DOCUMENT G703

AIA Document G702, APPLICATION AND CERTIFICATION FOR PAYMENT, containing Contractor's signed certification is attached.

In tabulations below, amounts are stated to the nearest dollar.

Use Column I on Contracts where variable retainage for line items may apply.

APPLICATION NO:
APPLICATION DATE:
PERIOD TO:
ARCHITECT'S PROJECT NO:

A	B	C	D	E	F	G		H	I
ITEM NO.	DESCRIPTION OF WORK	SCHEDULED VALUE	WORK COMPLETED		MATERIALS PRESENTLY STORED (NOT IN D OR E)	TOTAL COMPLETED AND STORED TO DATE (D+E+F)	% (G ÷ C)	BALANCE TO FINISH (C - G)	RETAINAGE (IF VARIABLE RATE)
			FROM PREVIOUS APPLICATION (D + E)	THIS PERIOD					
	GRAND TOTALS								

Users may obtain validation of this document by requesting of the license a completed AIA Document D401 - Certification of Document's Authenticity

AIA DOCUMENT G703 · CONTINUATION SHEET FOR G702 · 1992 EDITION · AIA · ©1992
THE AMERICAN INSTITUTE OF ARCHITECTS, 1735 NEW YORK AVENUE, N.W. WASHINGTON, D.C. 20006-5232

AIA® Document G704™ – 2017

Certificate of Substantial Completion

PROJECT: *(name and address)*	**CONTRACT INFORMATION:**	**CERTIFICATE INFORMATION:**
Contract #	Contract For: Construction Date:	Certificate Number: 001 Date:
OWNER: *(name and address)* City of Mobile - AE Department P. O. Box 1827 Mobile, Alabama 36633	**ARCHITECT:** *(name and address)*	**CONTRACTOR:** *(name and address)*

The Work identified below has been reviewed and found, to the Architect's best knowledge, information, and belief, to be substantially complete. Substantial Completion is the stage in the progress of the Work when the Work or designated portion is sufficiently complete in accordance with the Contract Documents so that the Owner can occupy or utilize the Work for its intended use. The date of Substantial Completion of the Project or portion designated below is the date established by this Certificate.
(Identify the Work, or portion thereof, that is substantially complete.)
Work of the Contract for Construction.

ARCHITECT *(Firm Name)*	**SIGNATURE**	**PRINTED NAME AND TITLE**	**DATE OF SUBSTANTIAL COMPLETION**

WARRANTIES
The date of Substantial Completion of the Project or portion designated above is also the date of commencement of applicable warranties required by the Contract Documents, except as stated below:
(Identify warranties that do not commence on the date of Substantial Completion, if any, and indicate their date of commencement.)

WORK TO BE COMPLETED OR CORRECTED
A list of items to be completed or corrected is attached hereto, or transmitted as agreed upon by the parties, and identified as follows:
(Identify the list of Work to be completed or corrected.)
See attached punch list.

The failure to include any items on such list does not alter the responsibility of the Contractor to complete all Work in accordance with the Contract Documents. Unless otherwise agreed to in writing, the date of commencement of warranties for items on the attached list will be the date of issuance of the final Certificate of Payment or the date of final payment, whichever occurs first. The Contractor will complete or correct the Work on the list of items attached hereto within ( ) days from the above date of Substantial Completion.

Cost estimate of Work to be completed or corrected: $

The responsibilities of the Owner and Contractor for security, maintenance, heat, utilities, damage to the Work, insurance, and other items identified below shall be as follows:
(Note: Owner's and Contractor's legal and insurance counsel should review insurance requirements and coverage.)
Per the Contract Documents, the Contractor shall be responsible for damages to the Work and providing all Insurance required under the AIA A101-Agreement Between Owner and the Contractor for a Stipulated Sum, Article 8.5.1, until Final Payment. The Contractor shall also be responsible for labor and materials as required to provide repairs to the work for one calendar year following the substantial completion date. The Owner shall be responsible for general security, heat, and utilities at the facility.

The Owner and Contractor hereby accept the responsibilities assigned to them in this Certificate of Substantial Completion:

CONTRACTOR *(Firm Name)*	**SIGNATURE**	**PRINTED NAME AND TITLE**	**DATE**
City of Mobile		Cynthia L. Klotz, AIA, Assistant Director	
OWNER *(Firm Name)*	**SIGNATURE**	**PRINTED NAME AND TITLE**	**DATE**

AIA Document G704™ – 2017. Copyright © 1963, 1978, 1992, 2000 and 2017 by The American Institute of Architects. All rights reserved. The "American Institute of Architects," "AIA," the AIA Logo, and "AIA Contract Documents" are registered trademarks and may not be used without permission. This document was produced by AIA software at 12:49:53 ET on 03/03/2021 under Order No.1377377835 which expires on 08/28/2021, is not for resale, is licensed for one-time use only, and may only be used in accordance with the AIA Contract Documents® Terms of Service. To report copyright violations, e-mail copyright@aia.org.
User Notes: (3B9ADA5A)

A Landscape Development Plan for

Lavretta Park Pickleball Courts

PR-073-22 Mobile, Alabama

Prepared for

City of Mobile

Mobile, Alabama

Prepared by

was DESIGN landscape architects

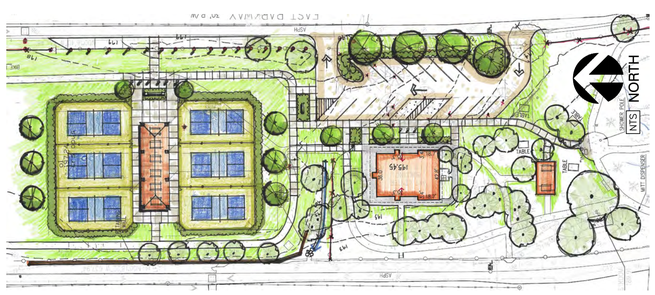

Sheet List Table	
Sheet Number	Sheet Title
CS100	COVER SHEET
LS010	OVERALL SITE PLAN
EC100	EXISTING CONDITIONS
LD100	LANDSCAPE DEMOLITION PLAN
LS100	LANDSCAPE SITE PLAN
LG100	GRADING AND DRAINAGE PLAN
LH100	HARDSCAPE PLAN
LH500	HARDSCAPE DETAILS
LH501	HARDSCAPE DETAILS
LH502	HARDSCAPE DETAILS
LH503	HARDSCAPE DETAILS
LH504	HARDSCAPE DETAILS
LP100	LANDSCAPE PLANTING PLAN
LP500	LANDSCAPE PLANTING DETAILS
C1.1	CIVIL GRADING & DRAINAGE PLAN
C1.2	CIVIL DETAILS
C1.3	CIVIL NOTES
E100	ELECTRICAL LEGEND AND SPECIFICATIONS
E200	ELECTICAL SITE PLAN - EXISTING
E300	ELECTRICAL SITE PLAN - NEW WORK
E400	ENLARGED PICKLEBALL COURT LIGHTING - NEW WORK
E500	ENLARGED PAVILION LIGHTED - POWER - NEW WORK
E600	NORTH PARKING LOT LIGHTING - NEW WORK
E700	SOUTH PARKING LOT LIGHTING - NEW WORK
E800	ELECTRICAL DETAILS
E900	ELECTRICAL DETAILS

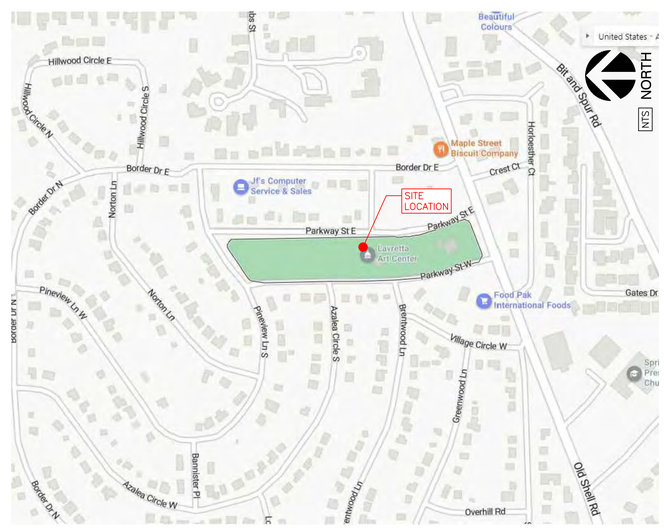

ABBREVIATION LEGEND

ALUM	ALUMINUM	LP	LOW POINT
AC	ACRES	LT	LEFT
ACCMP	ASPHALT-COATED CORRUGATED METAL PIPE	LIN	LINER
		LF	LINEAR FEET
ACP	ASBESTOS CEMENT PIPE	LC	LANDSCAPE CONTRACTOR
APPROX	APPROXIMATE(LY)	LA	LANDSCAPE ARCHITECT
B&B	BALLED AND BURLAPPED	M	METER
BC	BOTTOM OF CURB	MAX	MAXIMUM
BIT	BITUMINOUS	MH	MANHOLE
BM	BENCHMARK	MIN	MINIMUM
BLDG	BUILDING	MISC	MISCELLANEOUS
BS	BOTTOM OF SLOPE	MON	MONUMENT
BVC	BEGINNING OF VERTICAL CURVE	N	NORTH
BW	BOTH WAYS	NIC	NOT IN CONTRACT
CAL	CALIPER	NTS	NOT TO SCALE
CB	CATCH BASIN	NO	NUMBER
CI	CAST IRON	NOM	NOMINAL DIMENSION
CIR	CIRCULAR	OC	ON CENTER
CL	CENTERLINE	OD	OUTSIDE DIAMETER
CLF	CHAIN-LINK FENCE	PA	PLANTING AREA
CO	CLEANOUT	PCP	POROUS CONCRETE PIPE
CM	CENTIMETER	PVC	POLYVINYL CHLORIDE PIPE
CMP	CORRUGATED METAL PIPE	PC	POINT OF CURVATURE
COL	COLUMN	PCC	POINT OF COMPOUND CURVATURE
CONC	CONCRETE		
CONT'R	CONTRACTOR	PL	PROPERTY LINE
COR	CORNER	PVC	POINT OF VERTICAL CURVATURE
C/S	CROSS SLOPE	PVT	POINT OF VERTICAL TANGENT
C/W	CONNECTED WITH	PT	POINT OF TANGENT
CF	CUBIC FEET	R	RADIUS
CY	CUBIC YARD	RCP	REINFORCED CONCRETE PIPE
D	DEGREE OF CURVATURE	ROW	RIGHT OF WAY
DETL	DETAIL	RT	RIGHT
DMH	DROP MANHOLE	REQD	REQUIRED
DF	DRINKING FOUNTAIN	REV	REVISION
DIM	DIMENSION	REINF	REINFORCED
DIA	DIAMETER	SAN	SANITARY
DWG	DRAWING	SECT	SECTION
DEP	DEPARTURE	SH	SHEET
DIR	DIRECTED	S	SOUTH
-E-	ELECTRICAL	SI	STORM INLET
E	EAST	-ST-	STORM SEWER
EA	EACH	-SAN-	SANITARY SEWER
EC	ELECTRICAL CONTRACTOR	SPEC	SPECIFICATIONS OR SPECIFIED
EL	ELEVATION	ST'L	STEEL
EAP	EXPOSED AGGREGATE PAVING	SQ	SQUARE
EVC	END OF VERTICAL CURVE	SF	SQUARE FOOT
ENGR	ENGINEER	SY	SQUARE YARD
EX	EXISTING	STA	STATION
EXP	EXPANSION	S/S	STAINLESS STEEL
EW	END WALL	-T-	TELEPHONE
ES	END SECTION	T	TANGENT
FFE	FINISHED FLOOR ELEVATION	TC	TOP OF CURB
FG	FINISHED GRADE	TE	TAPERED END
FIN	FINISH	TCP	TERRA-COTTA PIPE
FL	FLOOR	T&G	TONGUE AND GROOVE
FH	FIRE HYDRANT	TW	TOP OF WALL
FL	FLOW LINE	TS	TOP OF SLOPE
FSD	FULL-SIZED DETAIL	TWP	TOWNSHIP
FTG	FOOTING	TYP	TYPICAL
FT	FOOT OR FEET	UD	UNDERDRAIN
GA	GAUGE	USGS	US GEOLOGICAL SURVEY
-G-	GAS	VC	VERTICAL CURVE
GAL	GALLON	VAR	VARIES, VARIABLE
GALV	GALVANIZED	VERT	VERTICAL
GC	GENERAL CONTRACTOR	VCP	VITRIFIED CLAY PIPE
GR	GUARD RAIL	-W-	WATER
GD	GRADE	W	WEST
GV	GAS VALVE	W/	WITH
HB	HOSE BIB	W/O	WITHOUT
HW	HEAD WALL	WWM	WOVEN WIRE MESH
HP	HIGH POINT	WV	WATER VALVE
HT	HEIGHT	YD	YARD DRAIN
HOR	HORIZONTAL		
HWY	HIGHWAY	ø	ROUND DIAMETER
ID	INSIDE DIAMETER	@	AT
IN	INCH	'	FEET
INL	INLET	"	INCHES
INV	INVERT	#1	NUMBER
JB	JUNCTION BOX	1#	POUND
L	LENGTH OF CURVE		
LAT	LATITUDE		

CONSTRUCTION LAYOUT NOTES

SURVEYOR TO CONTACT LANDSCAPE ARCHITECT FOR AUTOCAD FILE FOR HARDSCAPE LAYOUT.
CONTRACTOR TO PROVIDE STAKING OF HARDSCAPE ELEMENTS AS REQUIRED FOR WORK.
CONTACT LANDSCAPE ARCHITECT FOR REVIEW OF LOCATIONS PRIOR TO COMMENCEMENT OF CONSTRUCTION.

PROJECT SUMMARY

THE PROJECT DESCRIBED WITHIN THESE DRAWINGS AND THE ACCOMPANYING PROJECT MANUAL IS A LANDSCAPE DEVELOPMENT PROJECT THAT COVERS WORK DESCRIBED AS:

- DEMOLISH EXISTING BASKETBALL COURTS AND PEDESTRIAN PAVING.
- SITE: PICKLEBALL COURTS; PAVILION; PARKING; PEDESTRIAN PAVING; FURNITURE: BENCHES; DRINKING FOUNTAIN; TRASH RECEPTACLE.
- UTILITIES: STORMWATER/DRAINAGE; SITE ELECTICAL/LIGHTING; WATER (DRINKING FOUNTAIN).
- GRADING: ADA ACCESSIBLE AMENITIES AND CIRCULATION; STORMWATER/DRAINAGE.

THIS PROJECT WILL BE COMPETITIVELY BID WITH THE OWNER DETERMINING THE WINNING SUBCONTRACTOR AT HIS SOLE DISCRETION. THE CONTRACT AMOUNT SHALL BE BASED UPON A STIPULATED SUM THAT IS INDICATED ON THE PROJECT'S BID FORM. THE WORK AGREEMENT SHALL BE BETWEEN THE CONTRACTOR AND THE PROJECT OWNER. THE OWNER HAS RETAINED THE SERVICES OF WAS DESIGN, INC. TO ASSIST IN CONSTRUCTION OBSERVATION AND CONTRACT ADMINISTRATION.

800-292-8525
#DIG (Cellular)
Dig Safely.
Alabama 1 Call

was DESIGN landscape architects
landscape architecture
land planning
placemaking
Foley, Alabama
P. 251.948.7181
Mobile, Alabama
P. 251.344.4023
Jackson, Mississippi
P. 601.790.0781
Pensacola, Florida
P. 850.203.4252
www.was-design.com

A Landscape Development Plan for
Lavretta Park
Pickleball Courts
PR-073-22 Mobile, Alabama

Revisions		
No.	Date	Revisions / Submissions
	08.30.23	95% CONSTRUCTION DRAWINGS
	09.29.23	100% CONSTRUCTION DRAWINGS

© Copyright 2022 WAS Design Inc. These documents and their contents are the property of WAS Design. Any reproductions, revisions, modifications or use of these documents without the express written consent of WAS Design is prohibited by law.

ABS
Drawn
ABS
Project Manager
JEC
Principal
226010-025
Project No.
05.19.23
Date

Registration
STATE OF ALABAMA
JAMES ELLIS CROW
6
REGISTERED LANDSCAPE ARCHITECT

Sheet Title

COVER SHEET

Sheet No.

CS100

32 EXTERIOR IMPROVEMENTS SCHEDULE

SYMBOL	DESCRIPTION	ESTIMATED QTY	DETAIL
32-30	BENCH: 6' BENCH; SURFACE MOUNT ON 4'X8' CONC. PAD; BENCH TO BE PROVIDED BY THE CITY OF MOBILE; CONTRACTOR TO RETRIEVE BENCH FROM CITY OF MOBILE. INSTALLED BY CONTRACTOR.	5	4/LH502
32-31	CONCRETE PAD: 4'X8' - 3,000 PSI; CONTRACTOR TO INSTALL 6' BENCH FURNISHED BY CITY OF MOBILE, CONTRACTOR TO PICK UP BENCH FROM CITY.	200 SF	4/LH502

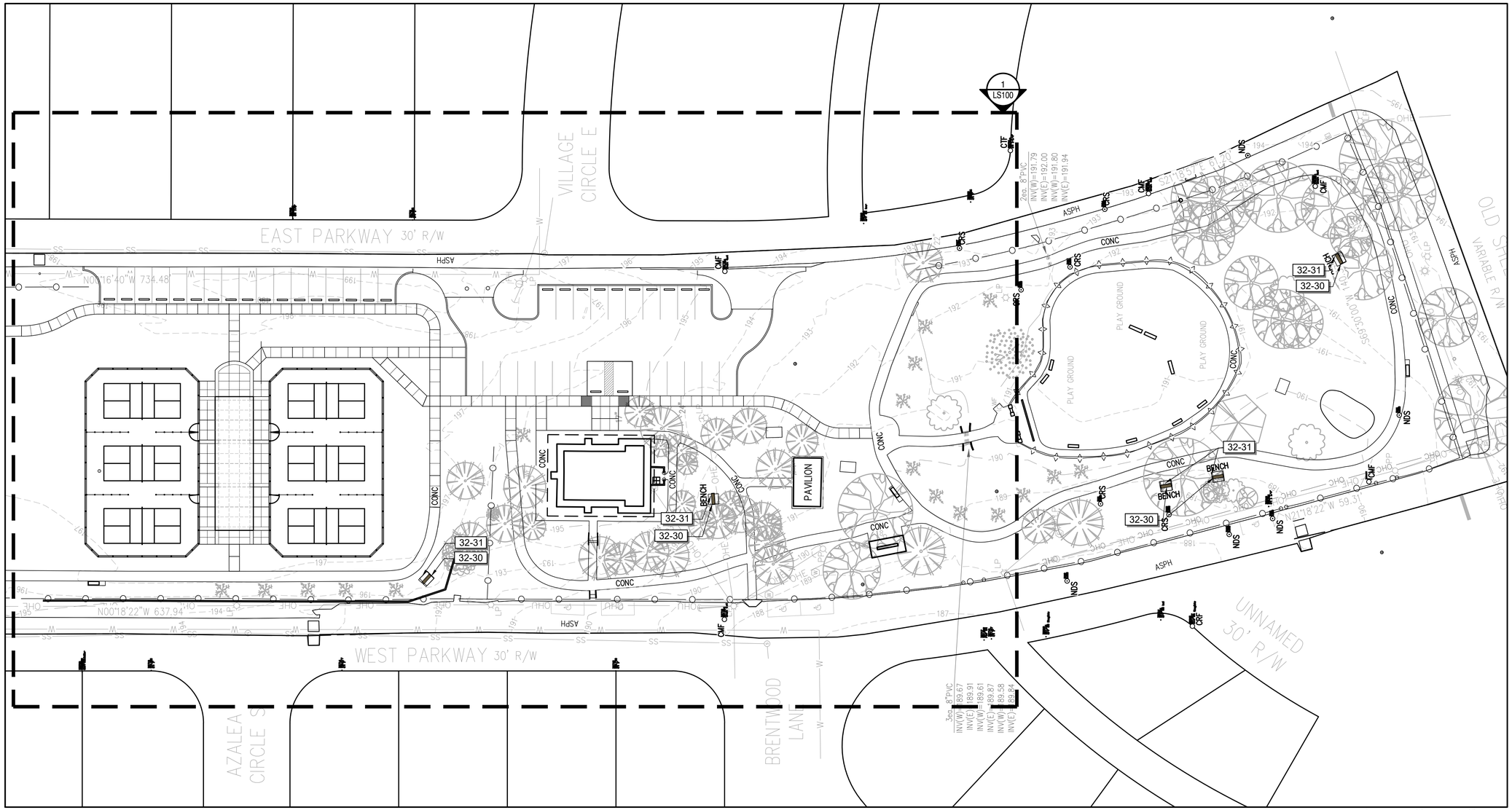

1 OVERALL SITE PLAN
Scale: 1" = 30'

landscape architecture
land planning
placemaking
Foley, Alabama
P. 251.948.7181
Mobile, Alabama
P. 251.344.4023
Jackson, Mississippi
P. 601.790.0781
Pensacola, Florida
P. 850.203.4252
WAS DESIGN landscape architects
www.was-design.com

A Landscape Development Plan for
Lavretta Park Pickleball Courts
PR-073-22 Mobile, Alabama

Revisions

No.	Date	Revisions / Submissions
	08.30.23	95% CONSTRUCTION DRAWINGS
	09.29.23	100% CONSTRUCTION DRAWINGS

© Copyright 2022 WAS Design Inc. These documents and their contents are the property of WAS Design. Any reproductions, revisions, modifications or use of these documents without the express written consent of WAS Design is prohibited by law.

ABS
Drawn
ABS
Project Manager
JEC
Principal
226010-025
Project No.
05.19.23
Date

Registration
STATE OF ALABAMA
JAMES ELLIS CROW
REGISTERED LANDSCAPE ARCHITECT
6

Sheet Title
OVERALL SITE PLAN

Sheet No.
LS010

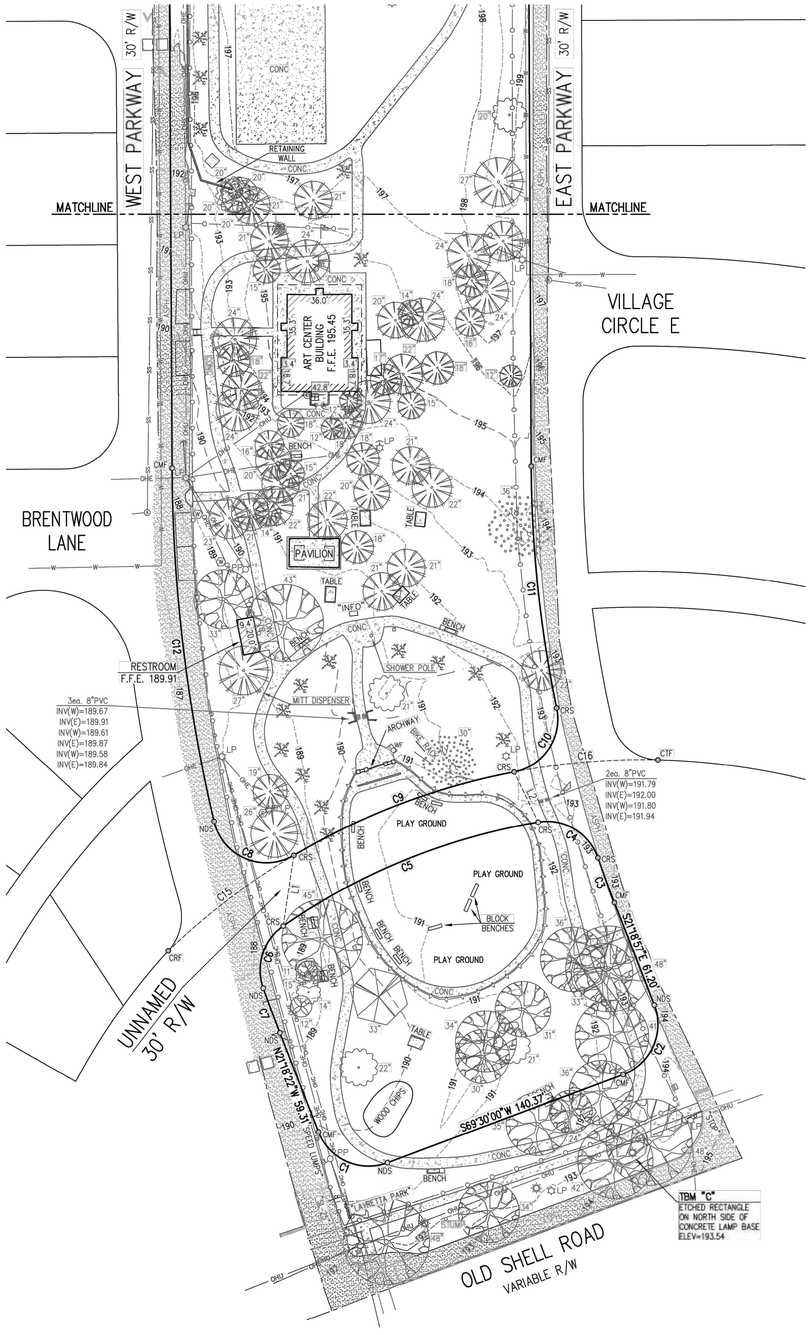

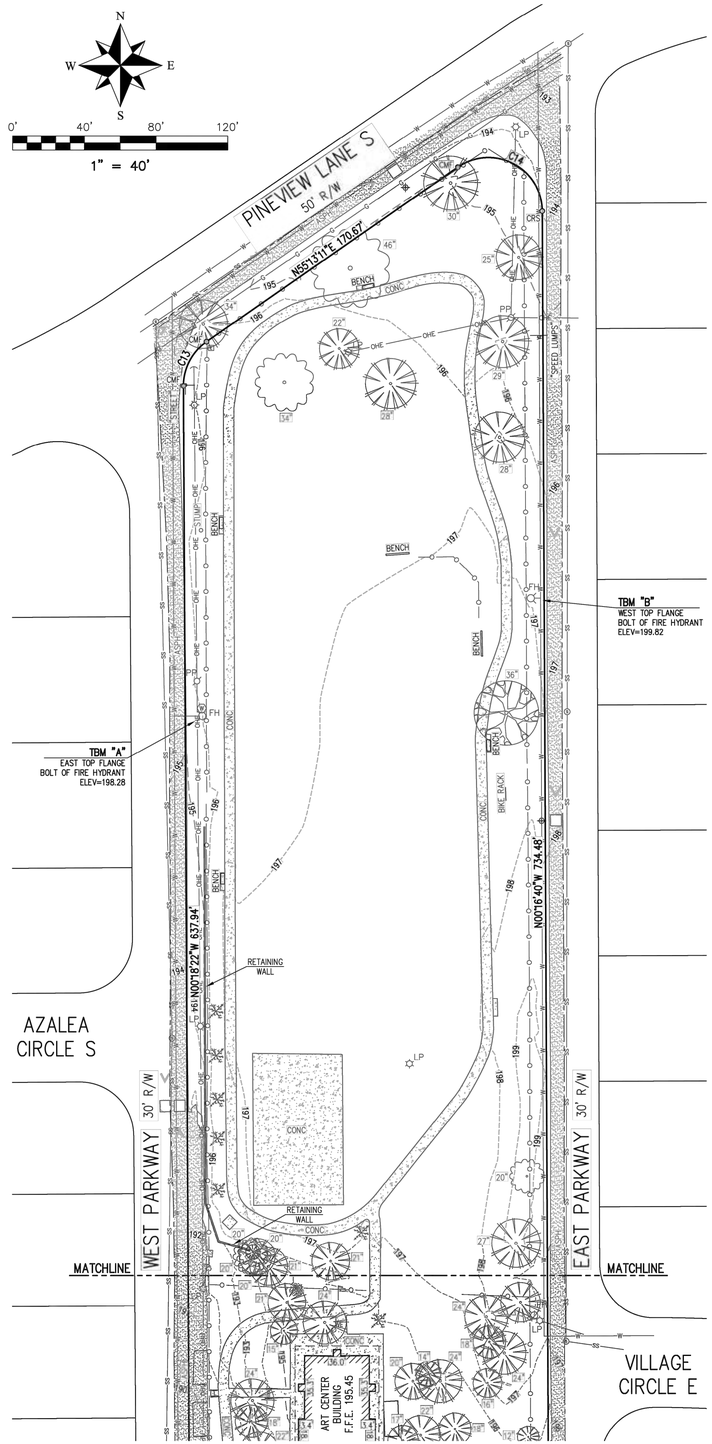

LEGEND

(R)	RECORD BEARING OR DISTANCE
(A)	ACTUAL BEARING OR DISTANCE
CRF	CAPPED REBAR FOUND (ILLEGIBLE)
CTF	CRIMP TOP PIPE FOUND
CMF	4"x4" CONCRETE MONUMENT FOUND
CRS	CAPPED REBAR SET
NDS	NAIL & DISK SET
PP	POWER POLE W/ANCHOR
LP	LIGHT POLE
	DECORATIVE LAMP
	ELECTRIC METER
	ELECTRIC BOX/VAULT
FH	FIRE HYDRANT
	WATER METER
WF	WATER FOUNTAIN
	SANITARY SEWER MANHOLE
CO	SANITARY SEWER CLEAN OUT
	HVAC UNIT
"STOP"	SIGN
	DELINEATION MARKER
OHU	OVERHEAD UTILITIES LINE
OHE	OVERHEAD ELECTRIC LINE
OHC	OVERHEAD COMMUNICATION LINE
TC	TRAFFIC CONTROL LINE
W	WATER LINE
SS	SANITARY SEWER LINE
G	NATURAL GAS LINE
	FLOW LINE
	CHAIN LINK FENCE
	FLAG POLE

TREE LEGEND

	LIVE OAK TREE
	OAK TREE
	PINE TREE
	MAGNOLIA TREE
	CHERRY TREE
	CEDAR TREE
	UNKNOWN TREE
	CREPE MYRTLE

LINE DATA

LINE	BEARING	DISTANCE
L1	S08°32'03"W	39.87'
L2	S25°31'21"E	31.11'

CURVE DATA

CURVE	DELTA ANGLE	RADIUS	ARC LENGTH	CHORD BEARING	CHORD LENGTH
C1	89°11'38"	30.00'	46.70'	S65°54'11"E	42.13'
C2	90°48'57"	29.95'	47.48'	N24°05'32"E	42.66'
C3(R)	---	680'	---	---	---
C3(A)	02°15'19"	678.72'	26.72'	S20°11'17"E	26.71'
C4	80°28'34"	30.00'	42.14'	N59°17'55"W	38.76'
C5	25°12'54"	351.78'	154.81'	S67°51'21"W	153.57'
C6	74°49'16"	30.00'	39.18'	S17°50'16"W	36.45'
C7(R)	---	880'	---	---	---
C7(A)	01°44'00"	880.00'	26.62'	S20°26'22"E	26.62'
C8(R)	113'	30'	59.2'	---	---
C8(A)	107°23'33"	30.00'	56.23'	N66°56'59"W	48.35'
C9	19°49'25"	381.78'	132.09'	N69°15'57"E	131.43'
C10(R)	94'	30'	49.2'	---	---
C10(A)	90°55'38"	30.00'	47.61'	N33°42'50"E	42.77'
C11(R)	---	680'	---	---	---
C11(A)	11°28'19"	678.72'	135.90'	N06°00'49"W	135.67'
C12(R)	---	880'	---	---	---
C12(A)	12°56'50"	880.00'	198.86'	S06°46'47"E	198.43'
C13(R)	56'	30'	29.3'	---	---
C13(A)	55°25'13"	30.00'	29.02'	N27°35'05"E	27.90'
C14(R)	124'	30'	64.9'	---	---
C14(A)	124°30'10"	30.00'	65.19'	N62°31'44"W	53.10'
C15	13°14'13"	381.78'	88.20'	N52°44'08"E	88.01'
C16	12°05'59"	381.78'	80.62'	N85°13'39"E	80.47'

LEGAL DESCRIPTION

STATE OF ALABAMA
COUNTY OF MOBILE

THE LOT LABELED "PARK AND PLAYGROUND" AND THE UNNUMBERED LOT SOUTH OF SAID "PARK AND PLAYGROUND" LOT SHOWN ON THE PLAT OF COUNTRY CLUB VILLAGE SUBDIVISION, AS RECORDED IN MAP BOOK 4, PAGES 87 THRU 92 OF THE RECORDS IN THE OFFICE OF THE JUDGE OF PROBATE, MOBILE COUNTY, ALABAMA.

NOTES

1. THE PROPERTY DESCRIBED HEREON IS SHOWN ON THE FEMA FLOOD INSURANCE RATE MAP NO. 01097C0533 L, DATED 06/05/20, AND IS SHOWN TO BE IN FLOOD ZONE "X-UNSHADED".
2. THIS SURVEY DOES NOT REFLECT ANY TITLE OR EASEMENT RESEARCH OTHER THAN WHAT IS READILY VISIBLE ON THE SURFACE OR PROVIDED BY THE CLIENT.
3. ELEVATIONS SHOWN HEREON ARE REFERENCED TO THE NORTH AMERICAN VERTICAL DATUM OF 1988 (NAVD88) AND WERE ESTABLISHED ON-SITE VIA STATIC GPS OBSERVATIONS THAT WERE PROCESSED WITH OPUS.
4. DISTANCES SHOWN HEREON ARE STATE PLANE COORDINATE GRID DISTANCES. DIVIDE GRID DISTANCE BY SCALE FACTOR OF 0.99998267 TO DETERMINE GROUND DISTANCE.
5. BEARINGS SHOWN HEREON ARE STATE PLANE COORDINATE GRID BEARINGS. CONVERGENCE ANGLE FROM GRID NORTH TO GEODETIC NORTH IS -00° 20' 13" AT N 252882.492, E 1760973.765.
6. UNDERGROUND UTILITIES SHOWN HEREON WERE ESTABLISHED BY FIELD MEASUREMENTS OF MARKINGS PLACED ON THE GROUND BY VARIOUS UTILITY COMPANIES IN RESPONSE TO LINE LOCATE TICKET NUMBER 223610685, 223610698, 223610702 & 223610706 OR AS SHOWN ON AS-BUILT DRAWINGS PROVIDED BY UTILITY COMPANIES.

SURVEYOR CERTIFICATION

I HEREBY CERTIFY THAT ALL PARTS OF THIS SURVEY AND DRAWING HAVE BEEN COMPLETED IN ACCORDANCE WITH THE CURRENT REQUIREMENTS OF THE STANDARDS OF PRACTICE FOR SURVEYING IN THE STATE OF ALABAMA TO THE BEST OF MY KNOWLEDGE, INFORMATION, AND BELIEF.

MARK A. WATTIER, PLS
ALABAMA REGISTRATION NO. 20364

ALABAMA REGISTERED NO. 20364 PROFESSIONAL LAND SURVEYOR MARK A. WATTIER

BOUNDARY & TOPOGRAPHIC SURVEY
LAVRETTA PARK

200 PARKWAY STREET WEST
MOBILE, AL 36608

PR-073-22

JANUARY 13, 2023

WATTIER SURVEYING, INC.
PROFESSIONAL LAND SURVEYORS
4318 Downtowner Loop N., Suite H
Mobile, Alabama 36609
251-342-2640

SURVEY TYPE: BOUNDARY & TOPOGRAPHIC SURVEY
BEARING REFERENCE: STATE PLANE GRID, NAD 83, AL WEST ZONE, U.S. SURVEY FOOT
INFORMATION SOURCE:

J.O. NO. 22-1208 COMP. FILE 2885 DWG. NO. 4S-2W-15-SUBD DATE OF LAST FIELD WORK 01/12/2022 CLIENT CITY OF MOBILE

REFERENCE NOTES SCHEDULE

SYMBOL	DEMOLITION DESCRIPTION	ESTIMATED QTY
D-101	EXISTING CONCRETE BASKETBALL COURT AND BASE MATERIAL: EXCAVATE TO SUFFICIENT DEPTH TO PROVIDE CONSTRUCTION TO PROPOSED FINISHED GRADE; DISPOSE OF WASTE APPROPRIATELY.	4,227 SF
D-102	EXISTING CONCRETE SIDEWALK: WHERE NECESSARY; EXCAVATE & REMOVE TO SUFFICIENT DEPTH TO INSTALL SUB-GRADE, INFRASTRUCTURE, AND OR IMPROVEMENTS.	2,199 SF
D-103	EXISTING 4' CHAIN LINK FENCE: REMOVE EX. 4' CHAIN LINK FENCE; DISPOSE OF WASTE APPROPRIATELY. BACKFILL ANY VOIDS W/ APPROVED TOPSOIL.	514 LF
D-104	EXISTING TREE: CLEAR AND GRUB; BACKFILL WITH SANDY LOAM SOIL. DISPOSE OF IN AN APPROPRIATE METHOD	20
D-105	EXISTING LIGHT POLE: REMOVE ELECTRICAL SUPPLY TO EX. LIGHT POLE; CAP ELECTRIC SUPPLY AT POINT OF DISCONNECT FOR SPLICE POINT; ENSURE POWER METER IS OFF BEFORE PERFORMING ANY ELECTRIC WORK; DISPOSE OF WASTE APPROPRIATELY. (SEE ELECTRICAL PLAN)	1
D-106	EXISTING PICNIC TABLE: REMOVE EX. PICNIC TABLE; DISPOSE OF WASTE APPROPRIATELY.	2
D-107	EXISTING CONCRETE PAD: REMOVE EXISTING CONCRETE PAD; EXCAVATE & REMOVE TO SUFFICIENT DEPTH TO INSTALL SUB-GREADE, INFRASTRUCTURE, AND/OR IMPROVEMENTS.	305 SF
D-108	EXISTING BENCH: REMOVE EXISTING BENCH AND TRASH RECEPTACLE, SALVAGE OR DISCARD PER OWNERS DIRECTIONS.	7

landscape architecture
land planning
placemaking

Foley, Alabama
P. 251.948.7181
Mobile, Alabama
P. 251.344.4023
Jackson, Mississippi
P. 601.790.0781
Pensacola, Florida
P. 850.203.4252

www.was-design.com

A Landscape Development Plan for
Lavretta Park Pickleball Courts
PR-073-22 Mobile, Alabama

Revisions

No.	Date	Revisions / Submissions
	08.30.23	95% CONSTRUCTION DRAWINGS
	09.29.23	100% CONSTRUCTION DRAWINGS

© Copyright 2022 WAS Design Inc. These documents and their contents are the property of WAS Design. Any reproductions, revisions, modifications or use of these documents without the express written consent of WAS Design is prohibited by law.

ABS
Drawn
ABS
Project Manager
JEC
Principal
226010-025
Project No.
05.19.23
Date

Registration
STATE OF ALABAMA
JAMES ELLIS CROWE
6
REGISTERED LANDSCAPE ARCHITECT

Sheet Title

LANDSCAPE DEMOLITION PLAN

Sheet No.
LD100

NOTE

GRADING THIS SHEET IS BY CIVIL ENG. & SERVES AS SITE ROUGH GRADING AND DRAINAGE. FOR FINAL GRADES RE: LG100 LANDSCAPE GRADING PLAN.

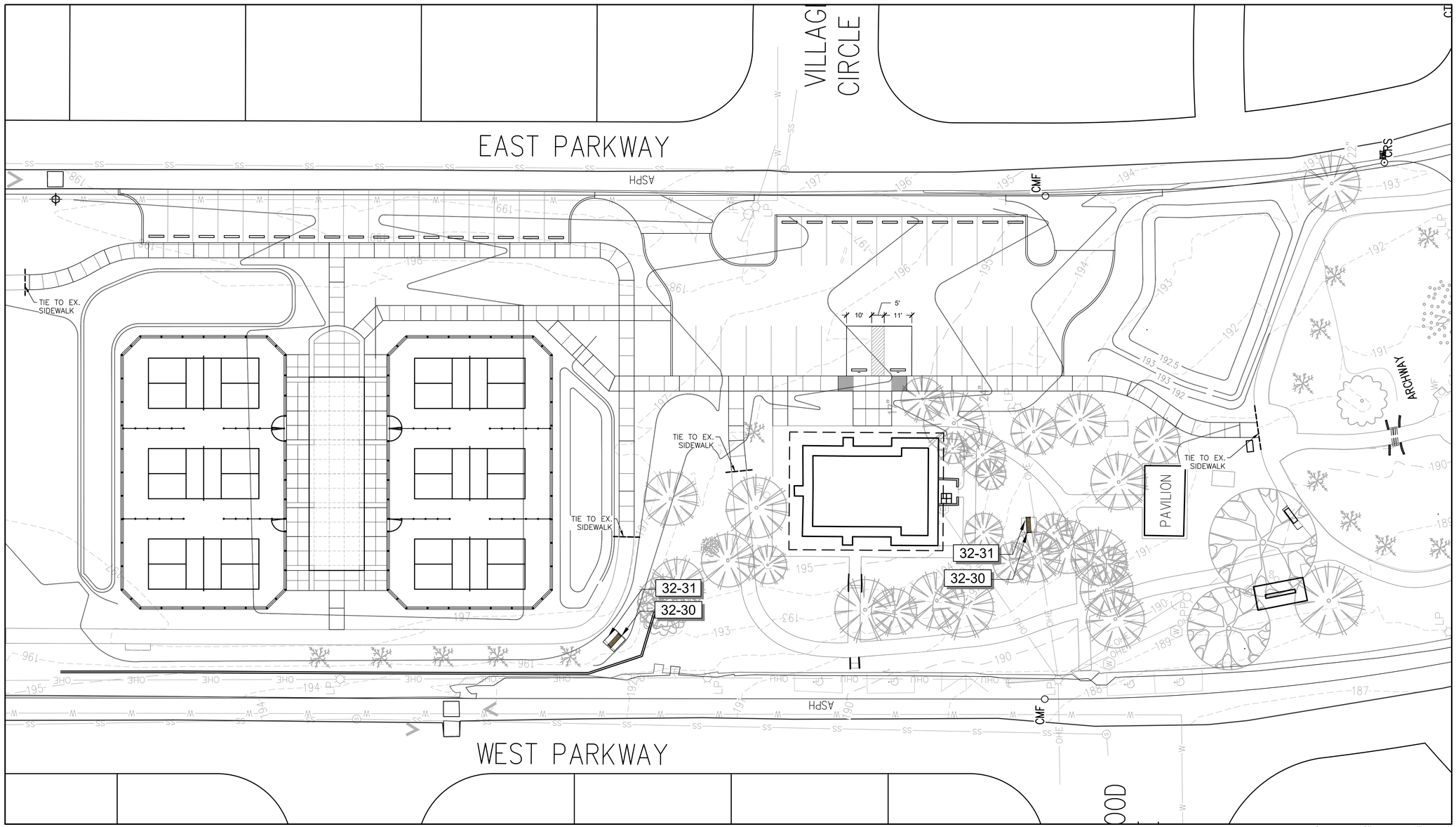

1 LANDSCAPE SITE PLAN
Scale: 1" = 20'

was DESIGN landscape architects
landscape architecture
land planning
placemaking
Foley, Alabama
P. 251.948.7181
Mobile, Alabama
P. 251.344.4023
Jackson, Mississippi
P. 601.790.0781
Pensacola, Florida
P. 850.203.4252
www.was-design.com

A Landscape Development Plan for
Lavretta Park Pickleball Courts
PR-073-22 Mobile, Alabama

Revisions

No.	Date	Revisions / Submissions
	08.30.23	95% CONSTRUCTION DRAWINGS
	09.29.23	100% CONSTRUCTION DRAWINGS

© Copyright 2022 WAS Design Inc. These documents and their contents are the property of WAS Design. Any reproductions, revisions, modifications or use of these documents without the express written consent of WAS Design is prohibited by law.

ABS
Drawn
ABS
Project Manager
JEC
Principal
226010-025
Project No.
05.19.23
Date

Registration
STATE OF ALABAMA
JAMES ELLIS CROWE
Number 6
REGISTERED LANDSCAPE ARCHITECT

Sheet Title

LANDSCAPE SITE PLAN

Sheet No.

LS100

GRADING LEGEND

- = DIRECTION OF SURFACE DRAINAGE FLOW ROUTE
- = SPOT ELEVATION (PROPOSED)
- = SPOT ELEVATION: EXISTING GRADE
- = DRAIN OUTLET 4" SCH 80 MITTERED OUTLET
- = INLET RE: 4" ATRIUM GRATE ON STAND PIPE
- = FLOW LINE
- = RIDGE LINE
- = STORM DRAIN
- = STORM DRAIN MANHOLE
- = SANITARY SEWER SERVICE LINE
- = SANITARY SEWER MANHOLE
- = WATER MAIN LINE
- = EXTENTS OF GRADING

- = FIRE HYDRANT
- BS = BOTTOM OF STEPS
- BC = BOTTOM OF CURB
- BW = BOTTOM OF WALL
- CE = COPING ELEVATION
- EG = EXISTING GRADE
- EP = EDGE OF PAVEMENT
- FFE = FINISH FLOOR
- FG = FINISHED GRADE
- FS = FINISHED SURFACE
- FL = FLOW LINE
- GB = GRADE BREAK
- HP = HIGH POINT
- I (#) = DRAIN INLET
- INV = INVERT ELEVATION
- LP = LOW POINT
- MH = MANHOLE
- RIM = RIM ELEVATION
- TC = TOP OF CURB
- TF = TOP OF FOOTING
- TG = TOP OF GRATE
- TS = TOP OF STEPS
- TW = TOP OF WALL
- WE = TOP OF WATER

GENERAL NOTES

1. CONTRACTOR SHALL BE RESPONSIBLE FOR MIN. REQUIREMENTS OF ADA ACCESSIBILITY GUIDELINES FOR THE CONSTRUCTION OF ACCESSIBLE ROUTES INCLUDING WALKS, RAMPS & LANDING TOLERANCES, CROSS SLOPES, RUNNING SLOPES, DETECTABLE WARNINGS AND HANDRAILS.
2. THE CONTRACTOR SHALL VERIFY ALL DIMENSIONS AND GRADES ON THE GROUND AND REPORT ANY DISCREPANCIES IMMEDIATELY TO THE OWNER.
3. CONTRACTOR SHALL MAINTAIN POSITIVE DRAINAGE AWAY FROM ALL BUILDING FOUNDATIONS AND STRUCTURES.
4. CONTRACTOR SHALL ENSURE ALL AREAS ARE PROPERLY DRAINED, WITH NO SURFACE WATER PONDING, PUDDLING OR EXCESSIVE BIRDBATHS.
5. MAX CROSS SLOPE SHALL BE 1.9%, MAX RUNNING SLOPE SHALL BE 5%, UNLESS OTHERWISE NOTED. CONTRACTOR SHALL NOTIFY L.A. OF ANY CONFLICTS PRIOR TO LAYOUT AND/OR CONSTRUCTION
6. REFERENCE CIVIL PLANS FOR SITE GRADING AND DRAINAGE REQUIREMENTS FOR STORMWATER DENTITION.
7. CONTRACTOR TO SOD ALL TURFED AREAS IMPACTED BY CONSTRUCTION

NOTE

THE CIVIL PROPOSED GRADING IS DISPLAYED AS EXISTING GRADE & THE SURVEY EXISTING TOPOGRAPHY IS SHOWN AS TOPOGRAPHY. THE LANDSCAPE ARCHITECTS GRADING IS DISPLAYED AS PROPOSED GRADE. IT IS UP TO THE CONTRACTOR TO DETERMINE THE DIFFERENCES IN TRUE EXISTING GRADE THE CIVIL PROPOSED GRADE AND THE LANDSCAPE ARCHITECTS PROPOSED GRADE. THE INTENT IS FOR THE CIVIL GRADE TO SERVE AS THE ROUGH GRADING AND TO PROVIDE FOR SITE DRAINAGE. THE LANDSCAPE ARCHITECT GRADING IS FOR SITE ADJUSTMENTS FOR CIRCULATION AND ADA COMPLIANCE. DIRECT ANY QUESTIONS AND/OR CONFLICTS TO THE LANDSCAPE ARCHITECT.

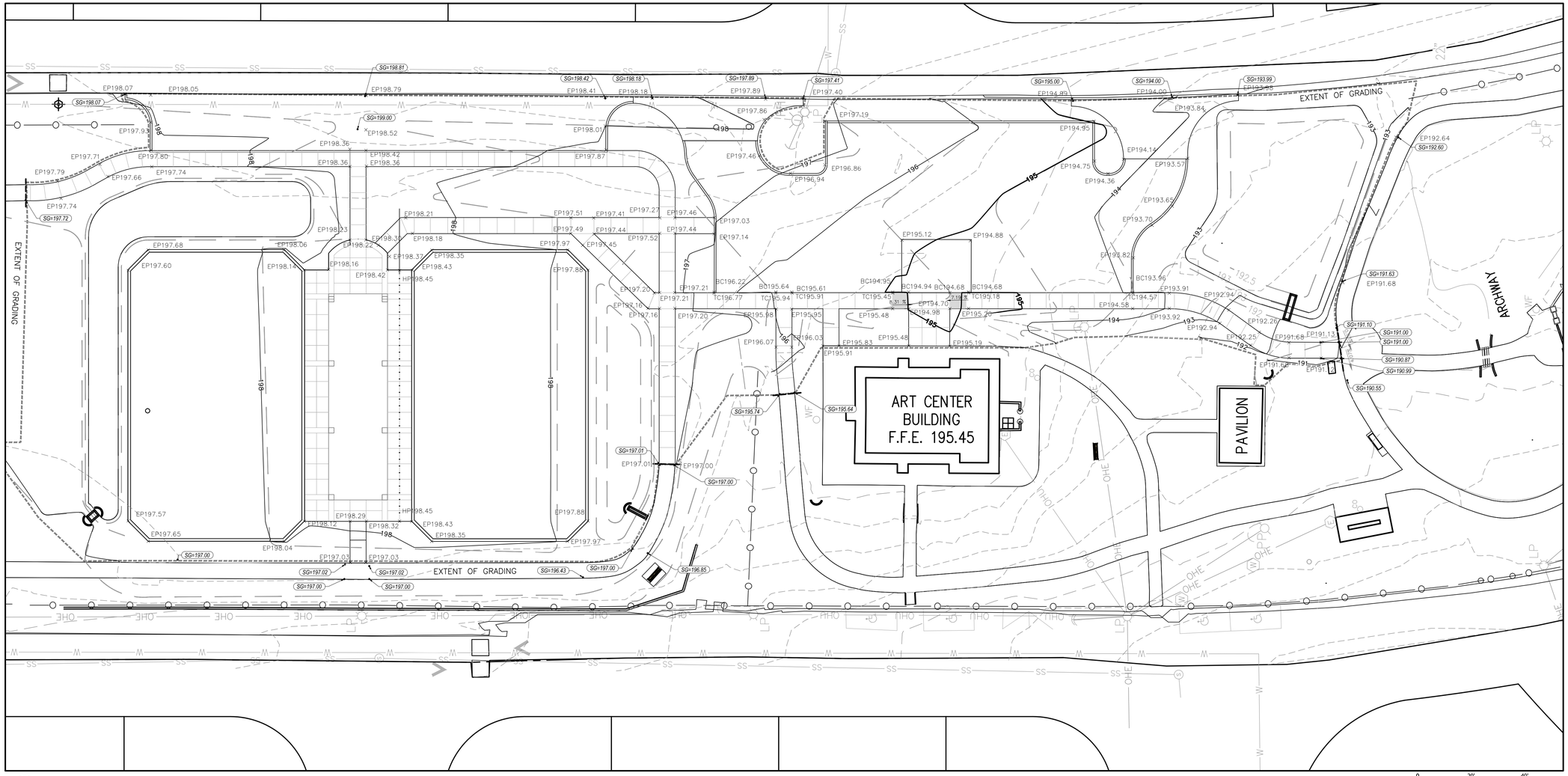

1 LANDSCAPE GRADING PLAN
Scale: 1" = 20'

0 20' 40'

was DESIGN landscape architects
landscape architecture
land planning
placemaking
Foley, Alabama
P. 251.948.7181
Mobile, Alabama
P. 251.344.4023
Jackson, Mississippi
P. 601.790.0781
Pensacola, Florida
P. 850.203.4252
www.was-design.com

A Landscape Development Plan for
Lavretta Park Pickleball Courts
PR-073-22 Mobile, Alabama

Revisions

No.	Date	Revisions / Submissions
	08.30.23	95% CONSTRUCTION DRAWINGS
	09.29.23	100% CONSTRUCTION DRAWINGS

© Copyright 2022 WAS Design Inc. These documents and their contents are the property of WAS Design. Any reproductions, revisions, modifications or use of these documents without the express written consent of WAS Design is prohibited by law.

ABS
Drawn
ABS
Project Manager
JEC
Principal
226010-025
Project No.
05.19.23
Date

Registration
STATE OF ALABAMA
JAMES ELLIS CROWE
REGISTERED LANDSCAPE ARCHITECT
6

Sheet Title

GRADING AND DRAINAGE PLAN

Sheet No.
LG100

32 EXTERIOR IMPROVEMENTS SCHEDULE

SYMBOL	DESCRIPTION	QTY	DETAIL
32-01	PICKLEBALL COURT PAINT (SEE SHEET LH500)	6	1/LH500
32-02	PICKLEBALL COURT NET & POST SYSTEM	6	3/LH500
32-03	ASPHALT: PICKLEBALL COURT	10,109 SF	4/LH500
32-04	CONCRETE PEDESTRIAN: 4" - 3,000 PSI; FIBER REINFORCED; LIGHT BROOM FINISH; NATURAL GRAY IN COLOR	9,302 SF	1/LH504
32-05	CONCRETE VEHICULAR: 6" - 3,500 PSI; LIGHT BROOM FINISH; NATURAL GRAY IN COLOR.	1,948 SF	7/LH500
32-06	CONCRETE RIBBON CURB AT COURTS: 12" - 3,000 PSI; NATURAL GRAY IN COLOR	659 LF	/
32-07	CONCRETE CURB: 8" RIBBON CURB AT PARKING; 3000 PSI,; REINFORCED; NATURAL GRAY; MIN. 1' BELOW GRADE EACH SIDE	351 LF	5/LH502
32-08	CONCRETE SIDEWALK WITH EDGE AT PARKING: 4" - 3,000 PSI CONCRETE; LIGHT BROOM FINISH; TO BE NATURAL GRAY IN COLOR	170 LF	4/LH503
32-09	UTILITY WATER LINE: CONNECT TO EXISTING DOMESTIC UTILITY WATER LINE	214 LF	2/LH500
32-10	CONCRETE TURNED DOWN WALK: 4 - 3,000 PSI; LIGHT BROOM FINISH; NATURAL GRAY IN COLOR	129 LF	3/LH503
32-11	AGGREGATE PARKING: 6" - 89-10 CRUSH AND RUN STONE	3,615 SF	8/LH504
32-12	AGGREGATE PARKING:RECYCLED CRUSHED CONCRETE	9,109 SF	8/LH504
32-13	FENCE: 4' CHAINLINK FENCE; GALVANIZED; TIE TO EXISTING PERIMITER FENCE; MATCH EXISTING POST SPACING AND CONSTRUCTION.	65 LF	4/LH501
32-14	PRECAST CONCRETE WHEELSTOP: 10"X6'	29	3/LH504
32-15	FENCE: 10' CHAINLINK FENCE; VINYL COATED; COLOR BLACK	628 LF	1/LH501
32-16	FENCE: 4' CHAINLINK DIVIDER FENCE; VINYL COATED; COLOR BLACK	192 LF	4/LH501
32-17	GATE: 4' CHAINLINK GATE; VINYL COATED; COLOR BLACK	6	3/LH501
32-18	STRIPING: HANDICAP PARKING STRIPING; COLOR BLUE; 4" TYP.	1	8/LH503
32-19	BENCH: HAMILTON BY ULTRASITE OR APPROVED EQUAL; MODEL 91C-S6-6' BENCH WITH CENTER ARM; COLOR BLACK; SURFACE MOUNT	6	4/LH502
32-20	BENCH: CONCRETE; 8' - 3,000 PSI; NATURAL GRAY IN COLOR; LIGHT BROOM FINISH	6	5/LH500
32-21	TRASH RECEPTACLE: ULTRASITE OR APPROVED EQUAL; MODEL CL-36RB14; COLOR BLACK	1	5/LH503
32-22	DRINKING FOUNTAIN WITH BOTTLE FILLER: BY HALSEY TAYLOR OR EQUAL; MODEL LK4430BF1M; COLOR BLACK; ENSURE ADA ACCESSIBILITY - DIRECT QUESTIONS TO LA.	1	2/LH500
32-23	SIGNAGE: VAN ACCESSIBLE SIGNAGE - PER ADA REQUIREMENTS	1	/
32-24	SIGNAGE: HANDICAP PARKING SIGNAGE - PER ADA REQUIREMENTS	1	7/LH504
32-25	20'X75' SHELTER: CEDAR FOREST PRODUCTS OR EQUAL; MODEL #RH52378-10EH-CUS; INSTALL ACCORDING TO MANUFACTURER'S RECOMMENDATIONS; COLOR BY OWNER; SUBMIT SHOP DRAWINGS FOR APPROVAL PRIOR TO INSTALLATIONS.	1	1/LH502
32-26	COLUMN: 36" HIGH X 24" SQ. - CMU PAINTED COLUMN; 4" PRE-CAST CONCRETE CAP	8	2/LH502
32-27	COURT NUMBER SIGN: 18" X 18" ALUMN. PROVIDE SHOP DRAWINGS FOR APPROVAL FOR INSTALLATION AND ANCHORING	6	7/LH503
32-28	COURT SIGN RULES: 18"X24" ALUMN. PROVIDE SHOP DRAWINGS FOR APPROVAL FOR INSTALLATION AND ANCHORING	2	6/LH503
32-29	WINDSCREEN: BY BALL FABRICS OR APPROVED EQUAL; 5'-8' IN HEIGHT; BLACK IN COLOR; HEMMED WITH BRASS GROMMETS AT 12" O.C.; SUBMIT SHOP DRAWINGS FOR APPROVAL PRIOR TO INSTALLATION.	628 LF	

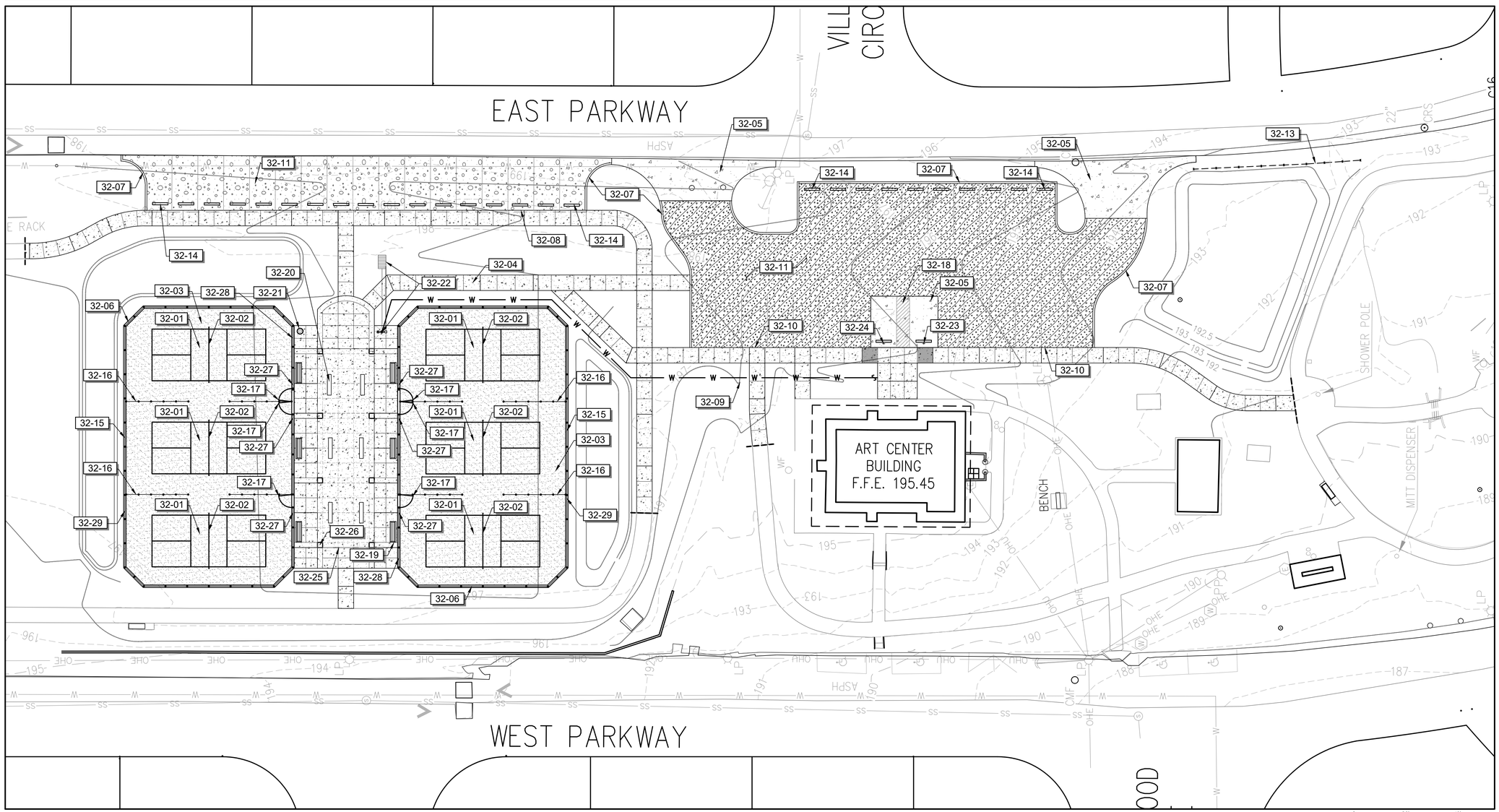

1 HARDSCAPE PLAN
Scale: 1" = 20'

0 20' 40'

NORTH

was DESIGN landscape architects
landscape architecture
land planning
placemaking
Foley, Alabama
P. 251.948.7181
Mobile, Alabama
P. 251.344.4023
Jackson, Mississippi
P. 601.790.0781
Pensacola, Florida
P. 850.203.4252
www.was-design.com

A Landscape Development Plan for
Lavretta Park Pickleball Courts
PR-073-22 Mobile, Alabama

Revisions

No.	Date	Revisions / Submissions
	08.30.23	95% CONSTRUCTION DRAWINGS
	09.29.23	100% CONSTRUCTION DRAWINGS

© Copyright 2022 WAS Design Inc. These documents and their contents are the property of WAS Design. Any reproductions, revisions, modifications or use of these documents without the express written consent of WAS Design is prohibited by law.

ABS
Drawn
ABS
Project Manager
JEC
Principal
226010-025
Project No.
05.19.23
Date

Registration
STATE OF ALABAMA
JAMES ELLIS CROWE
6
REGISTERED LANDSCAPE ARCHITECT

Sheet Title

HARDSCAPE PLAN

Sheet No.

LH100

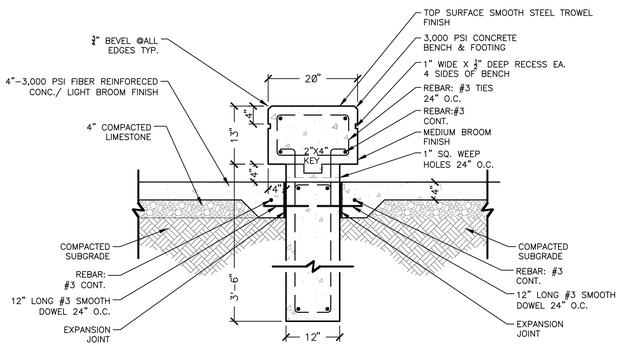

5 NEW CONCRETE BENCH DETAIL

3/4" = 1'-0" S-FU-27

PICKLEBALL SURFACING SYSTEM

1. THOROUGHLY CLEAN AND PRESSURE WASH THE COURTS UTILIZING A PRESSURE WASHER WITH AT LEAST 3,500 PSI. AREAS OF ALGAE, DIRT, SAND, OIL, ETC. SHOULD BE REMOVED.
2. ALL SEAMS, ROLLER MARKS, ETC. SHOULD BE PATCHED AND LEVELED WITH ACRYLIC RESURFACER AS DESCRIBED IN ITEM 4.
3. ALL LOW AREAS MUST BE LEVELED TO WITHIN 1/8" WITH AMERICAN PATCH BINDER. MIX 100 LBS. SILICA SAND WITH 2 GALLONS OF PORTLAND CEMENT AND ADD BINDER UNTIL DESIRED CONSISTENCY IS ACHIEVED.
4. OVER THE ASPHALTIC SURFACE COURSE, APPLY TWO (2) COATS OF ACRYTECH ACRYLIC RESURFACER IN ACCORDANCE WITH THE MANUFACTURER'S DIRECTIONS AT A RATE OF NOT LESS THAN .04 – .06 GALLONS PER SQUARE YARD (32 – 48 GALLONS FOR 800 SQUARE YARDS). DILUTION RATE WILL NOT EXCEED 1 PART WATER, 2 PARTS CONCENTRATE.
5. THE THIRD COAT SHOULD BE ACRYTECH COLOR CONCENTRATE IN ACCORDANCE WITH THE MANUFACTURER'S DIRECTIONS AT A RATE OF NOT LESS THAN .03 – .06 GALLONS PER SQUARE YARD (24 – 48 GALLONS FOR 800 SQUARE YARDS). DILUTION FOR THIS TEXTURE COAT SHALL BE 2 PARTS CONCENTRATE, 1 PART WATER, AND ONE PART SAND. (COLOR: LIGHT GREEN/DARK GREEN)
6. THE FINAL FINISH COAT OF ACRYTECH SHALL BE APPLIED AS DIRECTED BY THE MANUFACTURER AT A RATE OF NOT LESS THAN .03 – .06 GALLONS PER SQUARE YARD (24 – 48 GALLONS FOR 800 SQUARE YARDS). DILUTION FOR THIS TEXTURE COAT SHALL BE 2 PARTS CONCENTRATE, 1 PART WATER, AND ONE PART SAND. (COLOR: LIGHT GREEN/DARK GREEN)
7. WHITE PLAYING LINES FOR TENNIS AND BLENDED PLAYING LINES FOR PICKLE BALL, CONFORMING TO THE AMERICAN SPORTS BUILDERS ASSOCIATION SPECIFICATIONS, SHALL BE LAID OUT AND ACYRTECH TEXTURED LINE PAINT (100% ACRYLIC LATEX) APPLIED BY BRUSH OR ROLLER USING MASKING TAPE OR TEMPLATES
8. PRIOR TO THE ASPHALT INSTALLATION, 2'X2'X3' FOUNDATIONS ARE EXCAVATED FOR THE NET POSTS. A 3" ID SCHEDULE 40 PVC SLEEVE IS EMBEDDED IN 3,000PSI CONCRETE IN THE NET POST FOUNDATIONS. AN AMERICAN CENTER ANCHOR IS INSTALLED IN A 1'X1'X1' CONCRETE FOUNDATION.

6 COURT SURFACING SYSTEM

DETAIL-FILE

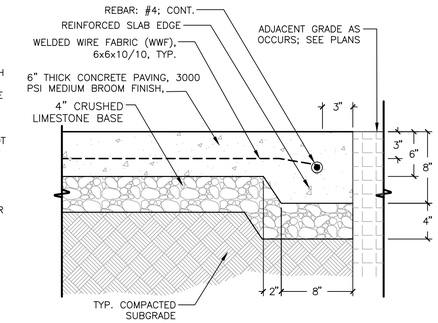

TYP. CONC. PAVING SECTION

7 6" VEHICULAR CONCRETE PAVING TYP.

1 1/2" = 1'-0" S-PA-CO-06

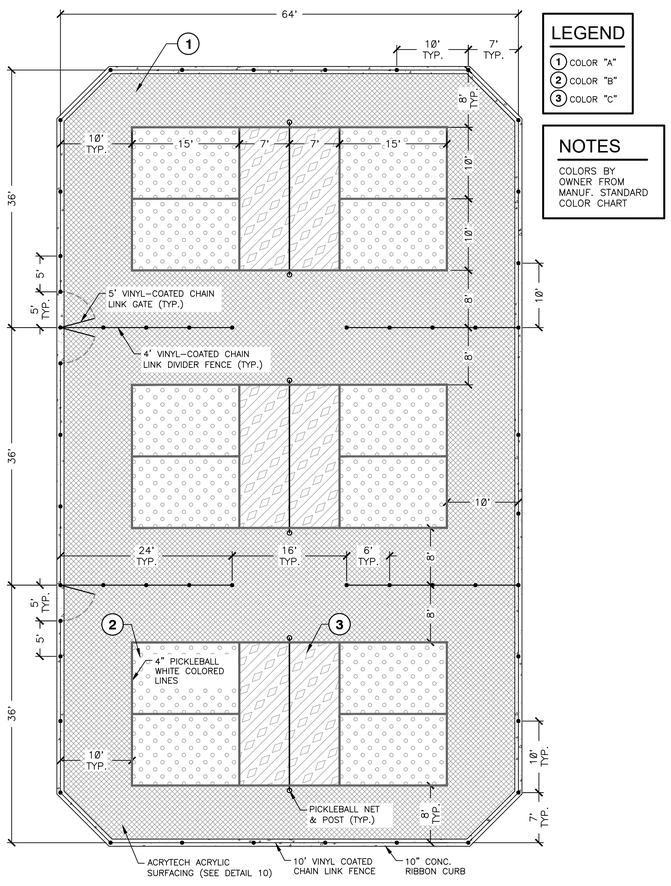

LEGEND

1 COLOR "A"
2 COLOR "B"
3 COLOR "C"

NOTES

COLORS BY OWNER FROM MANUF. STANDARD COLOR CHART

1 PICKLE BALL COURT PLAN

1" = 10' REC-PB-23

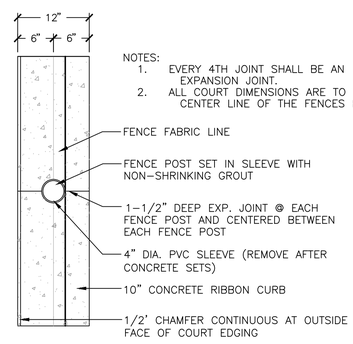

NOTES:
1. EVERY 4TH JOINT SHALL BE AN EXPANSION JOINT.
2. ALL COURT DIMENSIONS ARE TO THE CENTER LINE OF THE FENCES POST.

3 PLAN - CONCRETE EDGING AT COURT

1" = 1'-0" S-FENC-29

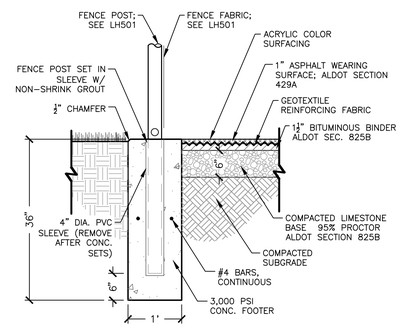

4 TYPICAL COURT SECTION

3/4" = 1'-0" REC-PB-26

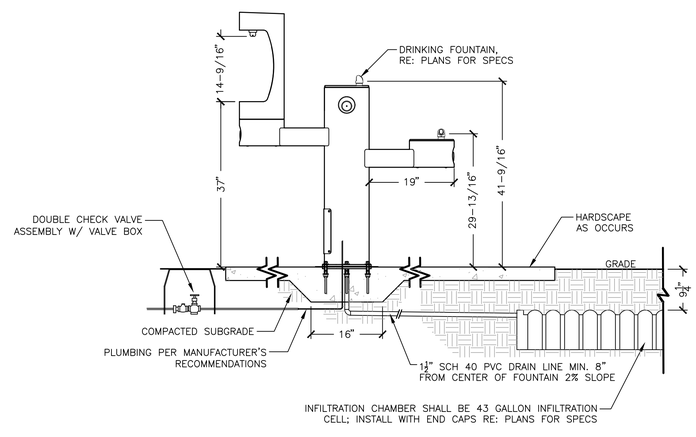

2 DRINKING FOUNTAIN W/BOTTLE FILLER & DRAIN CHAMBER

3/4" = 1'-0" SF-DR-13

was DESIGN landscape architects
landscape architecture
land planning
placemaking
Foley, Alabama P. 251.948.7181
Mobile, Alabama P. 251.344.4023
Jackson, Mississippi P. 601.790.0781
Pensacola, Florida P. 850.203.4252
www.was-design.com

A Landscape Development Plan for
Lavretta Park Pickleball Courts
PR-073-22 Mobile, Alabama

Revisions

No.	Date	Revisions / Submissions
	08.30.23	95% CONSTRUCTION DRAWINGS
	09.29.23	100% CONSTRUCTION DRAWINGS

© Copyright 2022 WAS Design Inc. These documents and their contents are the property of WAS Design. Any reproductions, revisions, modifications or use of these documents without the express written consent of WAS Design is prohibited by law.

ABS
Drawn
ABS
Project Manager
JEC
Principal
226010-025
Project No.
05.19.23
Date

Registration

STATE OF ALABAMA
JAMES ELLIS CROWE
6
REGISTERED LANDSCAPE ARCHITECT

Sheet Title

HARDSCAPE DETAILS

Sheet No.

LH500

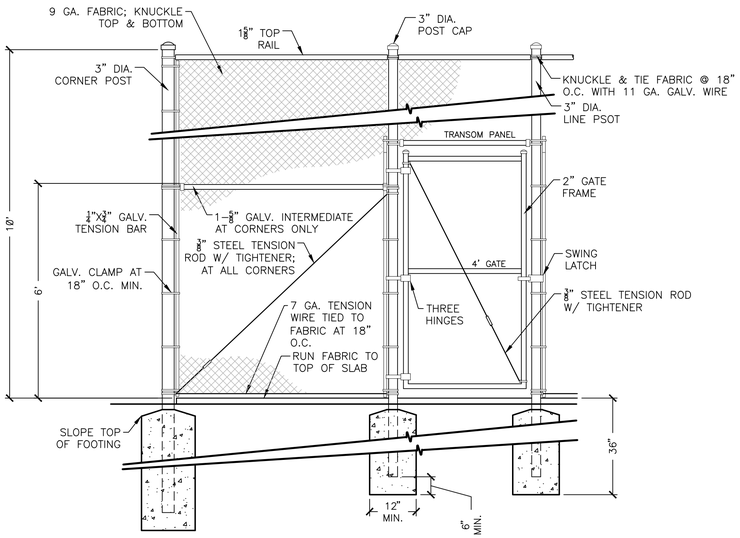

3 TYPICAL 10FT CHAIN LINK FENCE WITH GATE

1/2" = 1'-0"

S-FENC-36

LEGEND

1. TERMINAL POST: 2-7/8" POST
2. TERMINAL POST: 2-7/8" POST CAP
3. 1/4" BY 4" TENSION BAR
4. GALV. TENSION CLAMP
5. TOP RAIL: 1-5/8" PIPE
6. LINE POST: 1-7/8" PIPE
7. LINE POST: 1-7/8" POST CAP
8. 11 GA. CORE/8 GA. FINISH; KNUCKLE TOP & BOTTOM; CHAINLINK FABRIC (2"MESH); CONTINOUS
9. 7 GA. COIL SPRING TENSION WIRE
10. 3,000 PSI CONCRETE FOOTER

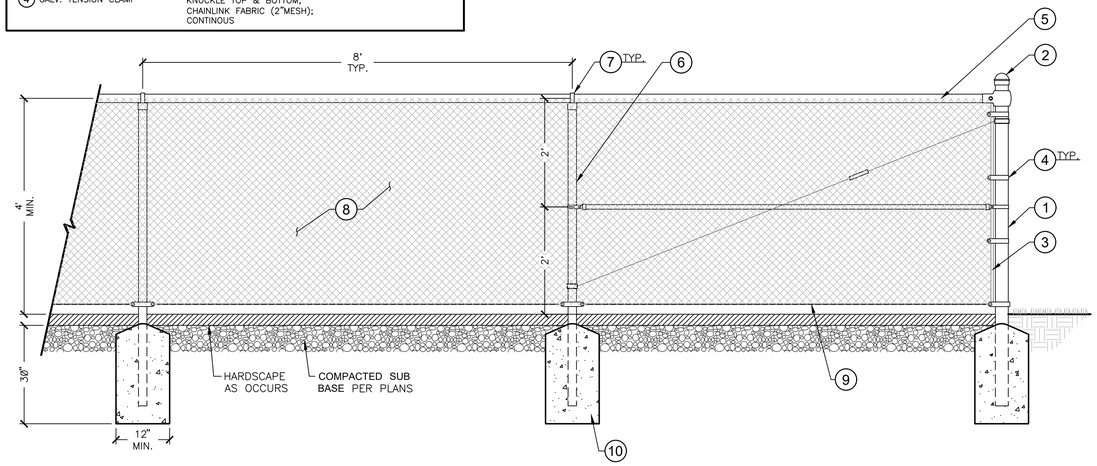

4 4 FT CHAINLINK DIVIDER FENCE

3/4" = 1'-0"

REC-PB-46

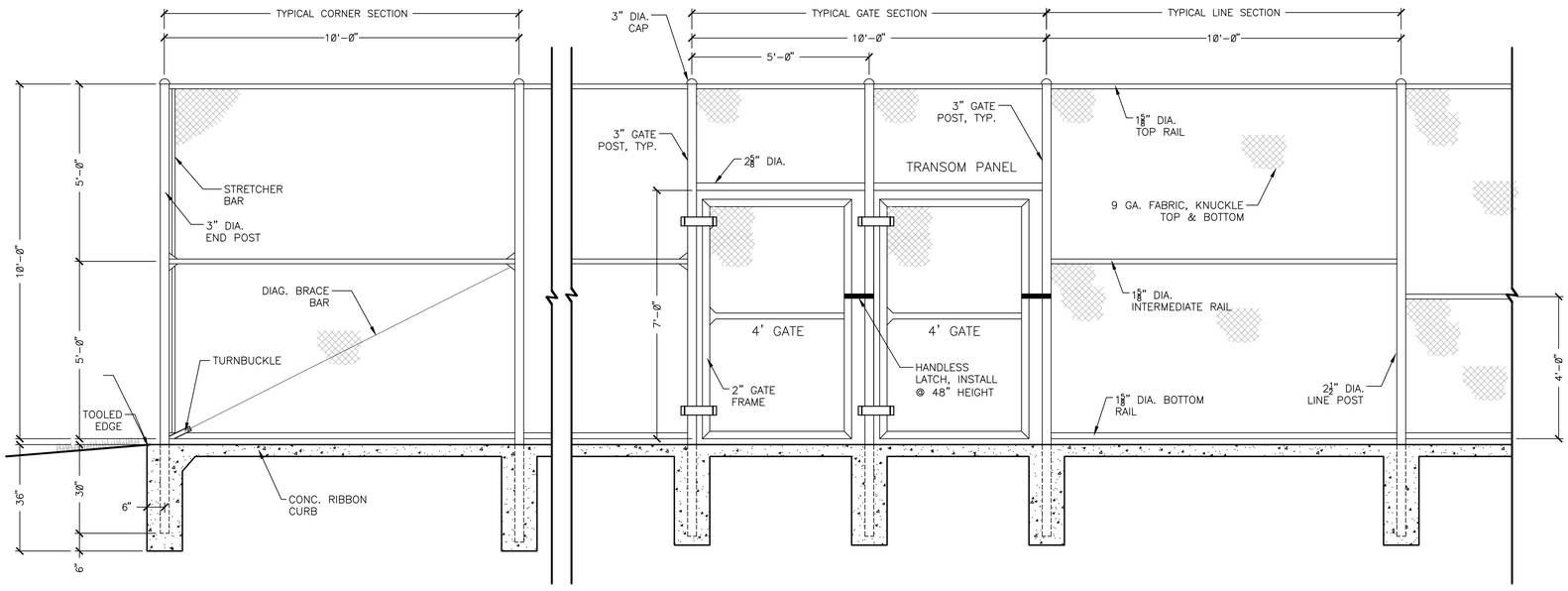

1 FENCE ELEVATION

1/2" = 1'-0"

REC-PB-12

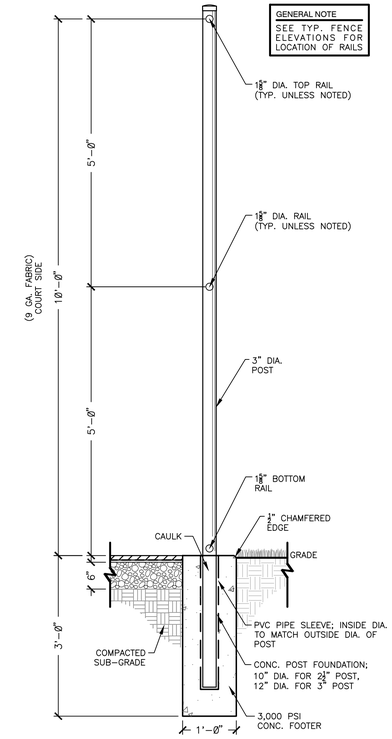

2 10'-0" FENCING SECTION

3/4" = 1'-0"

REC-PB-29

landscape architecture
land planning
placemaking

Foley, Alabama
P. 251.948.7181
Mobile, Alabama
P. 251.344.4023
Jackson, Mississippi
P. 601.790.0781
Pensacola, Florida
P. 850.203.4252

WAS DESIGN landscape architects www.was-design.com

A Landscape Development Plan for

Lavretta Park Pickleball Courts

PR-073-22 Mobile, Alabama

Revisions

No.	Date	Revisions / Submissions
	08.30.23	95% CONSTRUCTION DRAWINGS
	09.29.23	100% CONSTRUCTION DRAWINGS

© Copyright 2022 WAS Design Inc. These documents and their contents are the property of WAS Design. Any reproductions, revisions, modifications or use of these documents without the express written consent of WAS Desgin is prohibited by law.

ABS
Drawn
ABS
Project Manager
JEC
Principal
226010-025
Project No.
05.19.23
Date

Registration

STATE OF ALABAMA JAMES ELLIS CROWE 6 REGISTERED LANDSCAPE ARCHITECT

Sheet Title

HARDSCAPE DETAILS

Sheet No.

LH501

SCALE: NTS

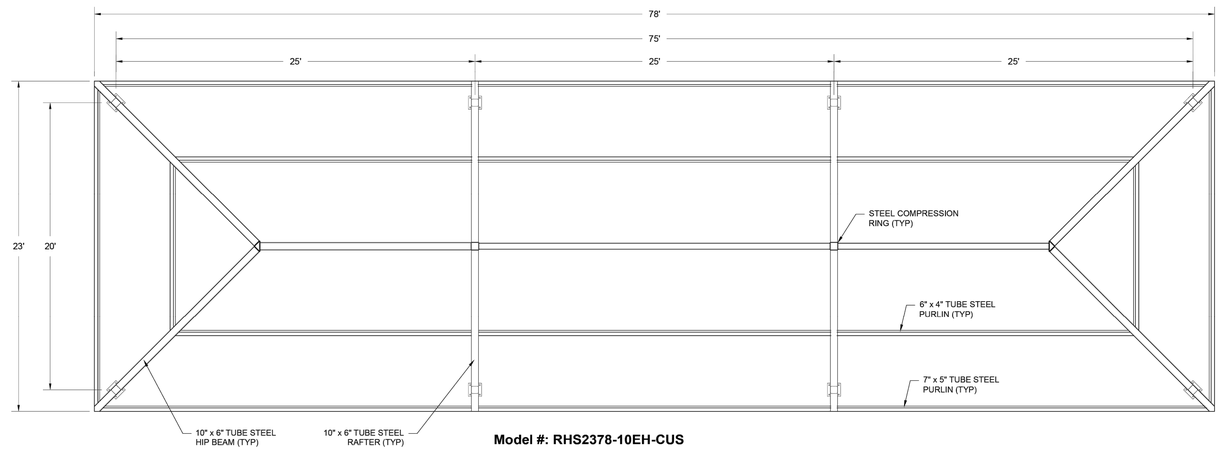

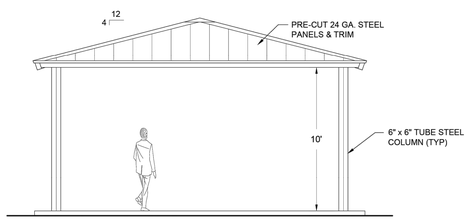

Model #: RHS2378-10EH-CUS

Design Criteria: Structure shall be designed to meet site specific snow and wind load design criteria using most current applicable building codes. All structural members are ASTM A-500 U.S. grade B steel. Welded connection plates shall be ASTM A-36 hot rolled steel. All fabrication performed to latest AISC standards by AWS Certified welders. All framing connections are done using A325 grade bolts within concealed access openings from above and will later be concealed by the roofing. All roof framing shall be flush against the roof decking to eliminate the possibility of bird nesting.

Tubular Steel Columns and Beams: Standard column dimension shall be 6" x 6" x 3/16" tubular steel welded to 5/8" base plates. Main support beams are 10" x 6" x 3/16" and purlins are 7" x 5" x 3/16" and 6" x 4" x 3/16". Steel sizes are preliminary and may change due to ongoing review and final engineering.

Roofing: 24 Ga. pre-cut steel Multi-Rib panels with Kynar 500 finish in a variety of colors with white underside. Standard roof slope is a 4/12 pitch with a eave height of 10-0". Attached to structural frame with exposed screws painted to match roof color. Matching 24 Ga. trim included.

Frame Finish: All steel framework will receive a corrosion protective TGIC Polyester powder coat, electro-statically applied and cured at 400°F. A large selection of standard colors are available.

Foundation: All columns need to be anchored to concrete footings (footing design provided separately). Columns can be surface mounted with anchor bolts at or below finish slab elevation or they can be embedded directly into the footing. Anchor bolts and bracing templates included. Optional base plate covers are available at an additional cost.

Hardware: All structural hardware and roofing fasteners shall be provided.

Warranty: 10 years against manufacturer defects.

Not Included: Concrete work of any kind, unloading of product and installation.

CFP CEDAR FOREST PRODUCTS
P.O. BOX 145
WEST OLIVE, MI 49460
800-552-9495
WWW. CEDARFORESTPRODUCTS.COM

PRELIMINARY
NOT FOR CONSTRUCTION

© Copyright 2023 these drawings are the intellectual property of C.F.P. CO. and shall not be copied or disclosed to any unauthorized parties in part or its entirety without our written permission, and they shall not be used for construction unless approved by a C.F.P. Representative.

MODEL NUMBER:	RHS2378-10EH-CUS	SHOWN WITH STANDARD OPTIONS
DESCRIPTION:	23x78 Rect Hip Shelter w/ 10' Eave	
Possible Options:	☐ 29ga METAL ROOF ☐ STANDING SEAM ROOF ☐ CEDAR SHINGLES	☐ METAL BASE SHOES ☐ STEEL COLUMNS ☐ CUSTOM ROOF PITCH
	☐ LIGHTNING PROTECTION ☐ 2 TIER ROOF ☐ CUPOLA	

REVISION DATES	DRAWN BY	DATE
REV:	TEG	1-23-23
REV:	SHEET:	
REV:	1 OF 1	
REV:		

NOTES

COORDINATE ELECTRICAL CUT-OUTS, AS INDICATED ON THE ELECTRICAL PLANS, WITH PAVILION MANUFACTURER.

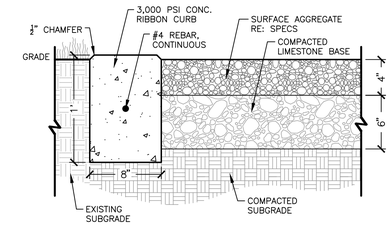

5 8" RIBBON CURB AT AGGREGATE PAVING

1 1/2" = 1'-0"

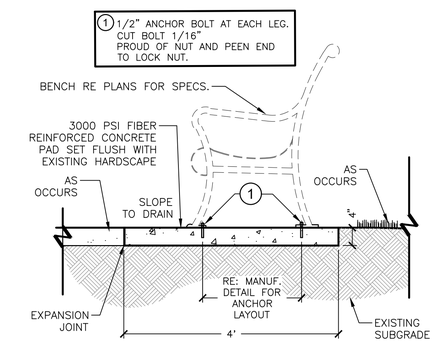

4 BENCH ON CONCRETE PAD

3/4" = 1'-0"

S-FU-19

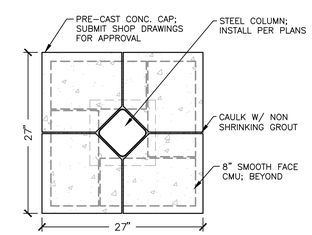

45° COLUMN

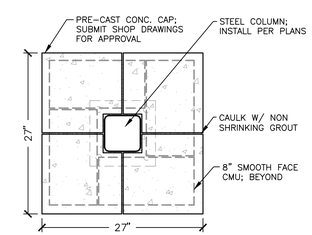

TYP. COLUMN

3 PAVILION COLUMN PLAN VIEW

1" = 1'-0"

REC-PB-53

ERIC ADAMS
PROFESSIONAL ENGINEER (FOUNDATION)

STRUCTURAL PROJECT MANAGER

MOBILE, ALABAMA

251-344-7073 CELL

Registration

August 9, 2023

DESIGN CRITERIA

1. 2021 INTERNATIONAL BUILDING CODE
2. DEAD LOAD: STRUCTURE SELF-WEIGHT
3. ROOF LOAD: 20PSF
4. WIND LOAD: 140 MPH, EXPOSURE B
5. RISK CATEGORY I

CONCRETE & REINFORCEMENT STEEL NOTES:

1. DESIGN, MATERIAL, WORKMANSHIP SHALL BE IN ACCORDANCE WITH THE CURRENT EDITION OR REVISION OR THE FOLLOWING STANDARDS: NOTED OTHERWISE:
   - ACI 318 "BUILDING CODE REQUIREMENTS FOR REINFORCED CONCRETE"
   - ACI 315 "MANUAL OF STANDARD PRACTICE FOR DETAILING REINFORCED CONCRETE STRUCTURES"
   - ACT 301 "SPECIFICATIONS FOR STRUCTURAL CONCRETE FOR BUILDINGS"
   - CRSI "RECOMMENDED PRACTICE FOR PLACING REINFORCING STEEL BARS CONFORMING TO.
2. CONCRETE SHALL DEVELOP 3000 PSI COMPRESSIVE STRENGTH IN 28 DAYS
3. REINFORCING STEEL SHALL BE DEFORMED ASTM A615 S1, GRADE 60.
4. WELDED WIRE FABRIC SHALL CONFORM TO ASTM A 185.
5. BAR SPLICES SHALL BE STAGGERED IN ANY ONE LOCATION UNLESS NOTED.
6. ALL REINFORCING HOOKS SHALL BE STANDARD ACI HOOKS
7. ALL EXPOSED EDGES OF CONCRETE SHALL HAVE A 3/4" 4' CHAMFER.
8. A 1/2" BITUMASTIC PRE FORMED EXP. JOINT SHALL BE PLACED AT ALL LOCATIONS NOTED ON THE DRAWING AND ALSO AROUND ALL FOUNDATIONS WHICH PROJECT THROUGH CONCRETE SLABS.
9. A 6 MIL. POLYETHYLENE VAPOR BARRIER IS REQ. UNDER ALL SLABS ON GRADE.

STEEL & HARDWARE SHOP NOTES:

1. ALL STRUCTURAL STEEL TUBING SHALL BE ASTM A-500 GRADE B.
2. ALL OTHER STEEL (PLATES, GUSSETS, ETC.) SHALL BE ASTM A-36.
3. ALL WELDING IS TO BE DONE ACCORDANCE WITH LATEST AWS STANDARDS. ALL WELDS ARE TO DEVELOP FULL STRENGTH OF COMPONENT PARTS. (E7081 ELECTRODES)
4. ALL BOLTS TO BE ASTM A-325 & THREADED ROD TO BE ASTM B-7.
5. ALL FABRICATED STEEL & STRUCTURAL TUBES TO BE SAND BLASTED TO A WHITE CONDITION. THEN COVERED WITH AN ELECTRO-STATICALLY APPLIED CORROSION RESISTANT PRIMER. THEN A TWO COMPONENT, CORROSION RESISTANT ELECTRO-STATICALLY APPLIED, OVEN CURED TO 400 DEGREES COATING SYSTEM IS APPLIED WHICH COMBINES THE PROPERTIES OF TWO HIGH PERFORMANCE SYSTEMS. (EPOXY & POLYURETHANE).

ROOF MATERIAL:

METAL ROOF DECK SHALL BE 24 GA STEEL, 36" WIDE, 1 3/16" DEEP, FY=80KSI

ERECTION NOTES:

ALL MEMBERS MUST BE PROPERLY BRACED UNTIL THE COMPLETE STRUCTURAL SYSTEM HAS BEEN CONSTRUCTED.

1 NOTES

3/4" = 1'-0"

REC-PB-21

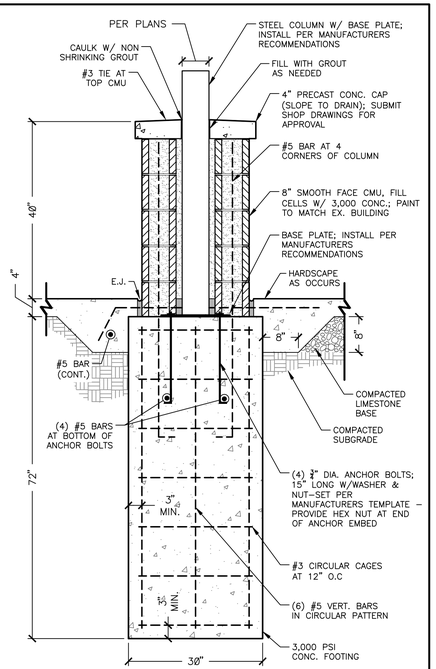

2 STRUCTURAL FOOTING

3/4" = 1'-0"

REC-PB-33

was DESIGN landscape architects
landscape architecture
land planning
placemaking
Foley, Alabama
P. 251.948.7181
Mobile, Alabama
P. 251.344.4023
Jackson, Mississippi
P. 601.790.0781
Pensacola, Florida
P. 850.203.4252
www.was-design.com

A Landscape Development Plan for
Lavretta Park Pickleball Courts
PR-073-22 Mobile, Alabama

Revisions

No.	Date	Revisions / Submissions
	08.30.23	95% CONSTRUCTION DRAWINGS
	09.29.23	100% CONSTRUCTION DRAWINGS

© Copyright 2022 WAS Design Inc. These documents and their contents are the property of WAS Design. Any reproductions, revisions, modifications or use of these documents without the express written consent of WAS Design is prohibited by law.

ABS
Drawn
ABS
Project Manager
JEC
Principal
226010-025
Project No.
05.19.23
Date

Registration

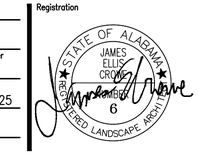

Sheet Title

HARDSCAPE DETAILS

Sheet No.

LH502

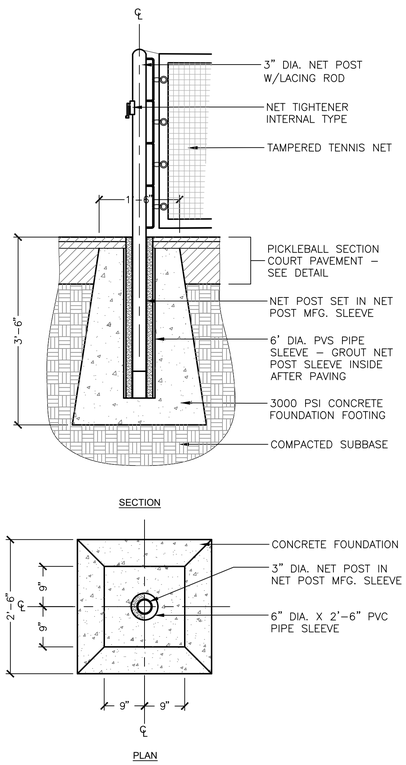

2 NET POST DETAIL

3/4" = 1'-0" REC-PB-03

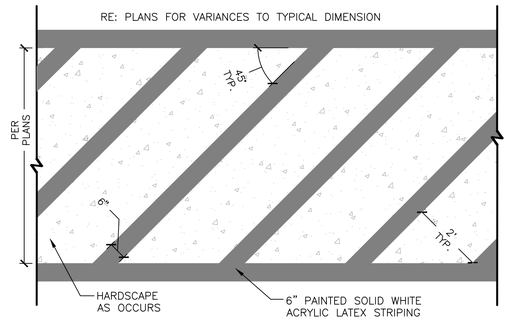

6 PAVEMENT STRIPING

1/2" = 1'-0" S-13

18"x24" ALUM. SIGN; COLOR CINYL IMAGES ON WHITE VINYL BACKGROUND; FULL COLOR LOGO DIGITAL PRINTED VINYL IMAGE TO BE PROVIDED; LAMINATED TO 3MM ALUM. PANEL W/ UV OVER-LAMINATED W/ PR DRILLED $\frac{1}{4}$" HOLES $\frac{1}{4}$" SS METAL SCREWS USING PREDRILLED HOLES

7 COURT RULES SIGN

1 1/2" = 1'-0" REC-PB-49

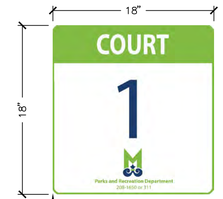

18"x24" ALUM. SIGN; COLOR VINYL IMAGES ON WHITE VINYL BACKGROUND; FULL COLOR LOGO DIGITAL PRINTED VINYL IMAGE TO BE PROVIDED; LAMINATED TO 3MM ALUM. PANEL W/ UV OVER-LAMINATED W/ PR DRILLED $\frac{1}{4}$" HOLES $\frac{1}{4}$" SS METAL SCREWS USING PREDRILLED HOLES

8 COURT NUMBER SIGN

1 1/2" = 1'-0" REC-PB-43

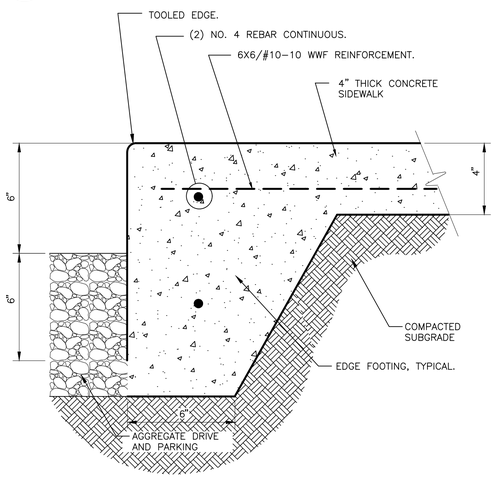

3 TURN-DOWN CONC. CURB AT AGGREGATE

3" = 1'-0" P-CO-MAD-03

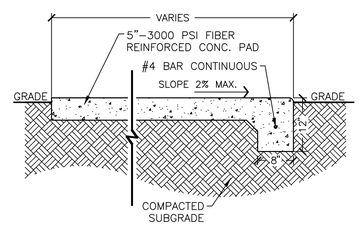

4 TURNED DOWN SIDEWALK DETAIL

3/4" = 1'-0" S-PA-CO-69

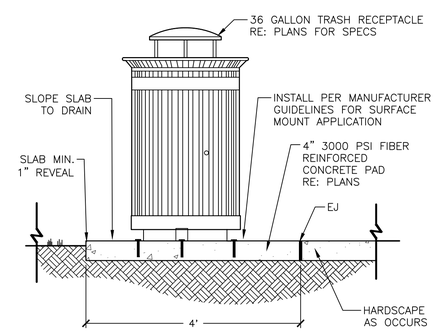

5 TRASH RECEPTACLE ON CONCRETE PAD

3/4" = 1'-0" S-FU-16

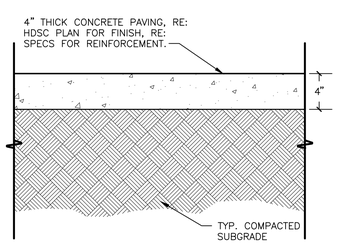

TYP. CONC. PAVING SECTION

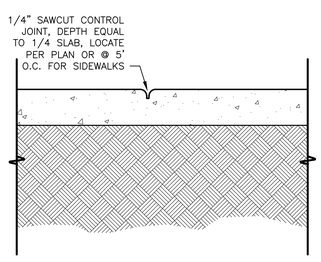

CONTROL JOINT

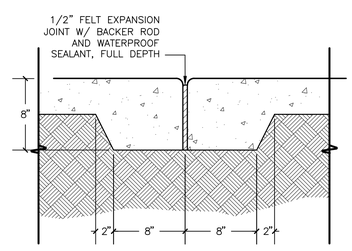

EXPANSION/CONSTRUCTION JOINT

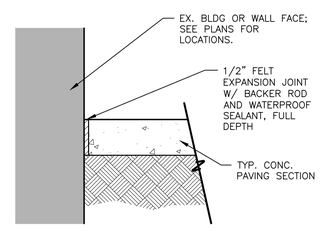

CONCRETE AT WALL/BLDG.

1 PEDESTRIAN CONCRETE PAVING

1 1/2" = 1'-0"

PAVE-CP-03

was DESIGN landscape architects
landscape architecture
land planning
placemaking
Foley, Alabama P. 251.948.7181
Mobile, Alabama P. 251.344.4023
Jackson, Mississippi P. 601.790.0781
Pensacola, Florida P. 850.203.4252
www.was-design.com

A Landscape Development Plan for
Lavretta Park Pickleball Courts
PR-073-22 Mobile, Alabama

Revisions

No.	Date	Revisions / Submissions
	08.30.23	95% CONSTRUCTION DRAWINGS
	09.29.23	100% CONSTRUCTION DRAWINGS

©Copyright 2022 WAS Design Inc. These documents and their contents are the property of WAS Design. Any reproductions, revisions, modifications or use of these documents without the express written consent of WAS Design is prohibited by law.

ABS
Drawn
ABS
Project Manager
JEC
Principal
226010-025
Project No.
05.19.23
Date

Registration

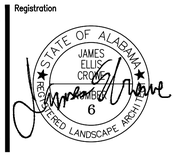

Sheet Title

HARDSCAPE DETAILS

Sheet No.

LH503

NOTE:
1. ALL PAINTED LINES SHALL BE BLUE ACRYLIC LATEX UNLESS OTHERWISE NOTED.
2. CROSS HATCHING IN ACCESS AISLE SHALL BE 4" WIDE SOLID BLUE LINES.
3. DIMENSIONS SHOWN ARE ADA MINIMUMS, REFER TO LOCAL CODES FOR FURTHER REGULATORY DIMENSIONS

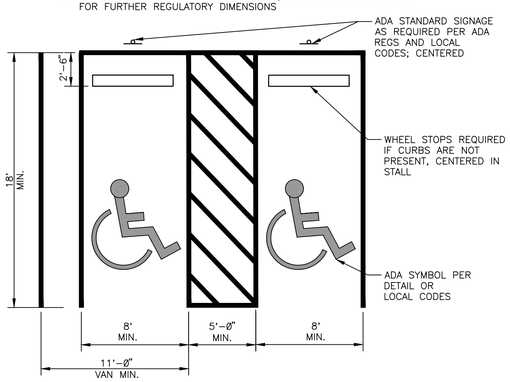

6 TYPICAL ADA STRIPING
3/16" = 1'-0" SIGN-SI-09

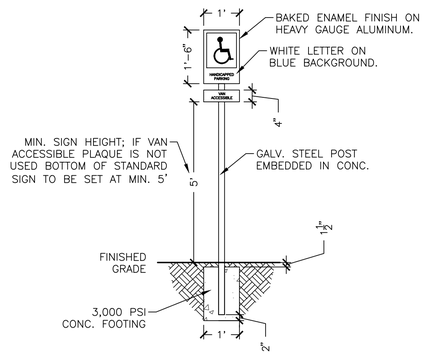

7 HANDICAPPED SIGN DETAIL
1/2" = 1'-0" S-FU-05

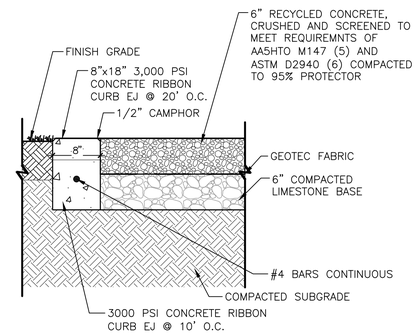

8 RECYCLED CONCRETE PARKING
1" = 1'-0" S-PA-19

NOTE: VERIFY COLOR SELECTION OF HANDICAPPED PARKING STRIPES AND LOGO WITH LOCAL AUTHORITY

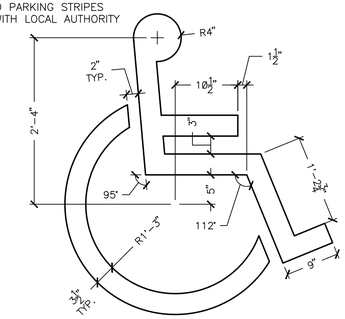

9 HANDICAPPED LOGO TYPICAL
1" = 1'-0" SIGN-SU-01

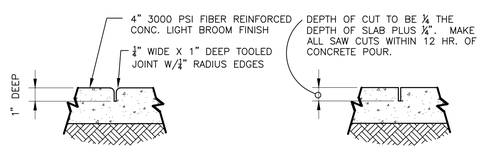

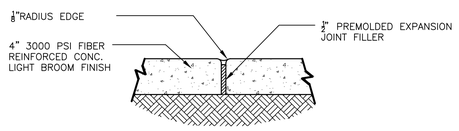

NOTE:
1. JOINT FILLER TO BE FLUSH WITH SIDEWALK SURFACE WHEN JOINT SEALER IS USED.
2. EXP. JOINT MATERIAL TO MEET ALDOT SPECIFICATIONS 832.01 & 832.02

EXPANSION JOINT

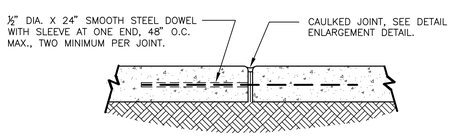

DOWELED CONSTRUCTION JOINT

1 TYPICAL CONCRETE PAVING JOINT DETAILS
1 1/2" = 1'-0" S-PA-CO-73

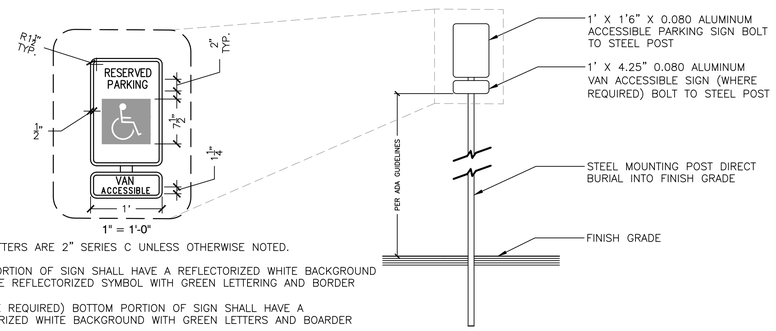

NOTE:

1 ALL LETTERS ARE 2" SERIES C UNLESS OTHERWISE NOTED.

2 TOP PORTION OF SIGN SHALL HAVE A REFLECTORIZED WHITE BACKGROUND WITH BLUE REFLECTORIZED SYMBOL WITH GREEN LETTERING AND BORDER

3 (WHERE REQUIRED) BOTTOM PORTION OF SIGN SHALL HAVE A REFLECTORIZED WHITE BACKGROUND WITH GREEN LETTERS AND BOARDER

4 TYPICAL ADA PARKING SIGN
1/2" = 1'-0" SIGN-SI-15

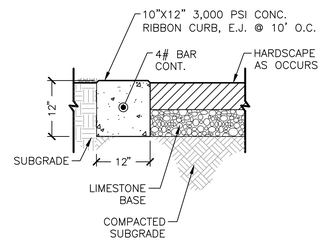

5 12" - RIBBON CURB
3/4" = 1'-0" S-PA-CO-106

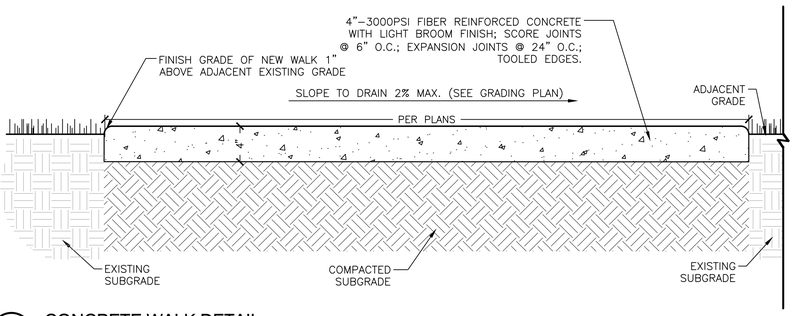

2 CONCRETE WALK DETAIL
1 1/2" = 1'-0" S-PA-CO-46

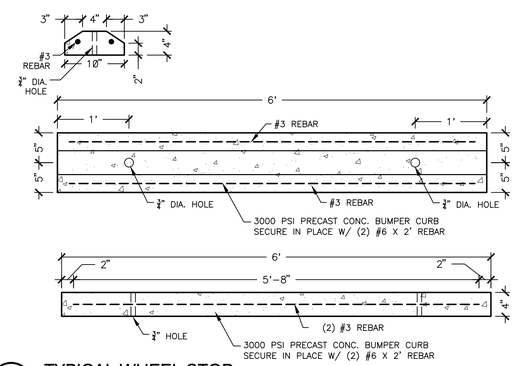

3 TYPICAL WHEEL STOP
1" = 1'-0" FURN-SC-03

was DESIGN landscape architects
landscape architecture
land planning
placemaking
Foley, Alabama P. 251.948.7181
Mobile, Alabama P. 251.344.4023
Jackson, Mississippi P. 601.790.0781
Pensacola, Florida P. 850.203.4252
www.was-design.com

A Landscape Development Plan for
Lavretta Park Pickleball Courts
PR-073-22 Mobile, Alabama

Revisions

No.	Date	Revisions / Submissions
	08.30.23	95% CONSTRUCTION DRAWINGS
	09.29.23	100% CONSTRUCTION DRAWINGS

© Copyright 2022 WAS Design Inc. These documents and their contents are the property of WAS Design. Any reproductions, revisions, modifications or use of these documents without the express written consent of WAS Design is prohibited by law.

ABS
Drawn
ABS
Project Manager
JEC
Principal
226010-025
Project No.
05.19.23
Date

Registration
STATE OF ALABAMA JAMES ELLIS CROWE 6 REGISTERED LANDSCAPE ARCHITECT

Sheet Title

HARDSCAPE DETAILS

Sheet No.
LH504

PLANT SCHEDULE

TREES	CODE	ESTIMATED QTY	BOTANICAL / COMMON NAME	CONT
	IL2	6	ILEX X 'CONTY' / LIBERTY™ HOLLY MIN.: 5'-6' H.	30 GAL
	LI2	3	LAGERSTROEMIA INDICA / CRAPE MYRTLE MATCH EXISTING	30 GAL
	LN	2	LAGERSTROEMIA INDICA X FAURIEI 'NATCHEZ' / NATCHEZ CRAPE MYRTLE MIN.: 8' H. MIN. 3 TRUNK; FULL HEAD, MIN. 1" CAL. PER TRUNK	30 GAL
	QN	9	QUERCUS NUTTALLII / NUTTALL OAK MIN.: 8'-10' H.	30 GAL. OR B&B
	TA	9	TAXODIUM ASCENDENS / POND CYPRESS MIN.: 8'-10' H.	30 GAL. OR B&B
	VC	6	VITEX X 'BAILTEXONE' / FIRST EDITIONS® FLIP SIDE® CHASTE TREE MIN.: 6'-8' H.	30 GAL

SHRUBS	CODE	ESTIMATED QTY	BOTANICAL / COMMON NAME	CONT	SPACING
	IC	50	ILEX CORNUTA 'CARISSA' / CARISSA CHINESE HOLLY	3 GAL	36" o.c.
	IN2	41	ILEX CORNUTA 'NEEDLEPOINT' / NEEDLEPOINT CHINESE HOLLY 3 FT O.C. SPACING	7 GAL	48" o.c.
	MC	49	MUHLENBERGIA CAPILLARIS / PINK MUHLY GRASS	3 GAL	36" o.c.

SOD	CODE	QTY	BOTANICAL / COMMON NAME	CONT	SPACING
	CT		CYNODON DACTYLON 'TIF 419' / TIF 419 BERMUDAGRASS	SOD	

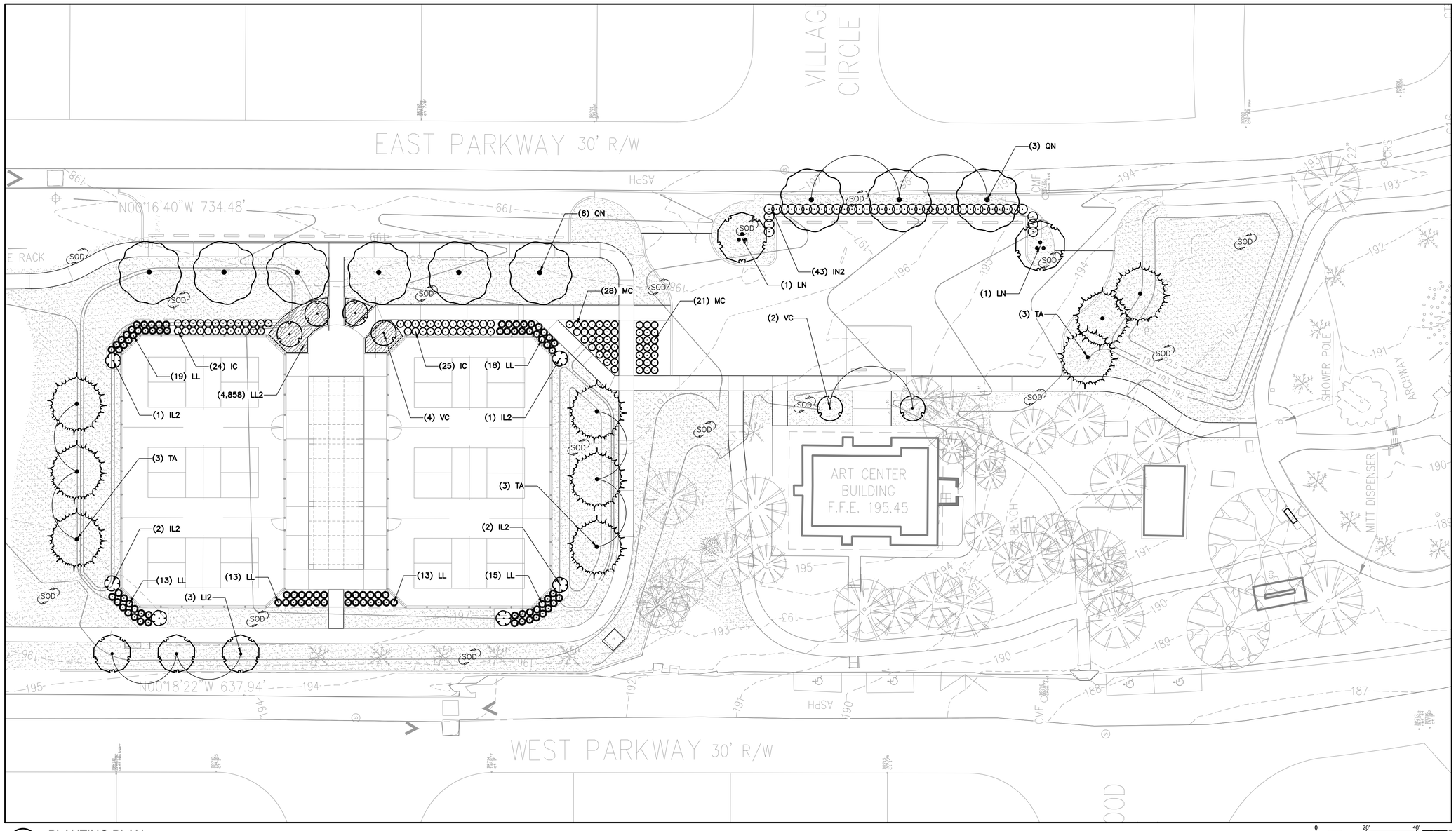

1 PLANTING PLAN
Scale: 1" = 20'

0 20' 40'
NORTH

landscape architecture
land planning
placemaking

Foley, Alabama
P. 251.948.7181
Mobile, Alabama
P. 251.344.4023
Jackson, Mississippi
P. 601.790.0781
Pensacola, Florida
P. 850.203.4252

www.was-design.com

A Landscape Development Plan for
Lavretta Park Pickleball Courts
PR-073-22 Mobile, Alabama

Revisions

No.	Date	Revisions / Submissions
	08.30.23	95% CONSTRUCTION DRAWINGS
	09.29.23	100% CONSTRUCTION DRAWINGS

© Copyright 2022 WAS Design Inc. These documents and their contents are the property of WAS Design. Any reproductions, revisions, modifications or use of these documents without the express written consent of WAS Design is prohibited by law.

ABS
Drawn
ABS
Project Manager
JEC
Principal
226010-025
Project No.
05.19.23
Date

Registration
STATE OF ALABAMA
JAMES ELLIS CROW
6
REGISTERED LANDSCAPE ARCHITECT

Sheet Title

LANDSCAPE PLANTING PLAN

Sheet No.
LP100

GENERAL CONDITIONS

- CONTRACTOR SHALL BE RESPONSIBLE FOR THE SITE INSPECTION PRIOR TO LANDSCAPE CONSTRUCTION AND INSTALLATION IN ORDER TO ACQUAINT HIMSELF WITH EXISTING CONDITIONS. CONTRACTOR SHALL BE RESPONSIBLE FOR LOCATING ALL EXISTING UNDERGROUND UTILITIES BEFORE BEGINNING CONSTRUCTION.
- CONTRACTOR IS RESPONSIBLE FOR PROTECTION OF LANDSCAPE MATERIAL AT ALL TIMES. LANDSCAPE CONTRACTOR TO COORDINATE SAFE STAGING AREA WITH GENERAL CONTRACTOR AND/OR OWNER.
- CONTRACTOR SHALL GUARANTEE ALL PLANT MATERIAL, INCLUDING GRASS, FOR 365 CONSECUTIVE CALENDAR DAYS FROM SUBSTANTIAL COMPLETION OF THE WORK, AS DETERMINED BY THE PROJECT LANDSCAPE ARCHITECT.
- ALL AREAS IMPACTED NEGATIVELY BY CONSTRUCTION PROCESSES SHALL BE RETURNED TO ORIGINAL CONDITION OR BETTER PRIOR TO SUBSTANTIAL COMPLETION.

LANDSCAPE AREA SOIL PREPARATION

- SOIL SHALL BE AMENDED BY THE ADDITION OF COMPOST AND FERTILIZER. COMPOST TYPE SHALL BE MUSHROOM COMPOST OR DECOMPOSED PINE BARK, AND SHALL BE APPROVED BY LANDSCAPE ARCHITECT PRIOR TO PURCHASE. COMPOST SHALL BE UNIFORMLY APPLIED OVER PLANTING BEDS AT AN AVERAGE DEPTH OF 2 INCHES AND OVER SOD AREAS AT AN AVERAGE DEPTH OF 3/4 INCH.
- INCORPORATE COMPOST UNIFORMLY IN PLANTING BEDS TO A DEPTH OF 6 INCHES AND IN SOD AREAS TO A DEPTH OF 3 INCHES USING A ROTARY TILLER OR OTHER APPROPRIATE EQUIPMENT. PRE-PLANT FERTILIZER AND PH ADJUSTING AGENTS (E.G., LIME AND SULFUR) MAY BE APPLIED IN CONJUNCTION WITH COMPOST INCORPORATION, AS NECESSARY.
- RAKE SOIL SURFACE SMOOTH PRIOR TO PLANTING.
- REMOVE STONES LARGER THAN 1 INCH IN ANY DIMENSION AND STICKS, ROOTS, RUBBISH, AND OTHER EXTRANEOUS MATTER AND LEGALLY DISPOSE OF THEM OFF OWNER'S PROPERTY.
- WATER THOROUGHLY AFTER PLANTING.
- CONTRACTOR SHALL BE RESPONSIBLE FOR PROVIDING 3% POSITIVE DRAINAGE IN ALL PLANTING BEDS. ANY OTHER PROPOSED DRAINAGE METHODS SHALL BE COORDINATED WITH PLANTING EFFORTS TO MINIMIZE CONFLICTS AND MAINTAIN PROPER FUNCTION OF DRAINAGE SYSTEMS.

PLANT MATERIAL AND PLANTING

- PLANT QUANTITIES ARE OFFERED AS A CONVENIENCE TO THE CONTRACTOR, AND ARE NOT ABSOLUTE. CONTRACTOR SHALL VERIFY PLANT COUNT FROM PLAN AND REPORT DIFFERENCES.
- ALL PLANT MATERIALS ARE SUBJECT TO APPROVAL OR REFUSAL BY THE OWNER OR LANDSCAPE ARCHITECT AT THE JOB SITE.
- PLANTS SHALL BE WELL FORMED, VIGOROUS, GROWING SPECIMENS WITH GROWTH TYPICAL OF VARIETIES SPECIFIED AND SHALL BE FREE FROM INJURY, INSECTS AND DISEASES. PLANTS SHALL EQUAL OR SURPASS QUALITY AS DEFINED IN THE CURRENT ISSUE OF "AMERICAN STANDARDS FOR NURSERY STOCK" AS PUBLISHED BY THE AMERICAN NURSERYMEN, INC.
- UNLESS NOTED SPECIFICALLY, ALL PLANT MATERIAL SHALL BE BALLED AND BURLAPPED OR CONTAINER GROWN.
- FRONT ROW OF SHRUBS SHALL BE PLANTED FROM CENTER OF PLANT A MINIMUM OF 24" BEHIND BED LINE @ LAWNS OR WALKS AND A MINIMUM OF 36" BACK OF CURB @ PARKING SPACES.
- NO PRUNING SHOULD BE PERFORMED DURING FIRST GROWING SEASON EXCEPT FOR REMOVING DAMAGED OF DEAD GROWTH. WOUND PAINT IS NOT RECOMMENDED FOR ANY CUTS.
- ALL PLANTING AREAS, TREE PITS, AND OTHER AREAS INDICATED ON PLANS SHALL BE MULCHED WITH A SETTLED LAYER OF THE INDICATED MULCH:
  - ☐ 3" DEPTH PINE BARK
  - ☐ 4" DEPTH SHREDDED HARDWOOD MULCH
  - ☒ 3" DEPTH LONGLEAF PINESTRAW, SETTLED
- TRENCH EDGE TO BE LOCATED BETWEEN ALL PLANTING AREAS AND LAWN, UNLESS NOTED OTHERWISE.
- TREE STAKING SHALL BE PROVIDED TO KEEP TREES PLUMB AND PROTECTED FROM EXCESSIVE WINDS. ALL TREE-STAKING APPARATUS SHALL BE REMOVED AT THE END OF THE ONE-YEAR WARRANTY PERIOD.
- ONE YEAR OF LANDSCAPE MAINTENANCE FROM SUBSTANTIAL COMPLETION SHALL BE INCLUDED AS AN OPTIONAL BID ITEM TO THE OWNER.

7 GENERAL PLANTING NOTES

1" = 1" 329399-05

NOTES

ALL TREES TO RECEIVE TREEGATOR ORIGINAL SLOW RELEASE WATERING BAG PER MANUFACTURER'S RECOMMENDATIONS.

NOTES

ALL SHRUB AREAS TO RECEIVE HYDRO GEL CRYSTALS INTO PLANTING SOILS, PER MANUFACTURERS RECOMMENDATIONS.

TREEGATOR® ORIGINAL

SLOW RELEASE WATERING BAG
FOR SHADE TREES

BENEFITS:

- *Ideal for newly planted shade or street trees.*
- *Reduces transplant and drought shock.*
- *100% water absorption with no run-off.*
- *Install and fill in minutes with no tools required.*
- *Deep water saturation with every fill.*
- *Fill just 1 to 2 times per week, or as needed.***
- *Promotes deep root growth.*
- *Non-invasive design will not harm existing landscape.*
- *Can be used with nutrient / chemical additives.***
- *Zip multiple bags together to accomodate large trees.*
- *Made in the U.S.A. with a 5-year limited warranty.*

***REFER TO WATERING CAPACITY / FREQUENCY CHART SHOWN BELOW*

DESCRIPTION:

If you plant shade trees, you need a Treegator® Original Slow Release Watering Bag! Golf courses, parks, cities, nurseries, landscapers, DOT's, resorts and homeowners all love its simple, affordable patented tree watering technology. Makes anyone a watering professional. Perfect for newly planted or established trees up to 8" in caliper, with branches beginning at least 25 inches from the ground or higher. Save time, water, effort and trees!

SPECS:

Single bag fits min. 1 inch to max. 4 inch caliper tree with branches at least 25" from the ground or higher.
Use a Double Bag setup (2 single bags zipped together back-to-back) to water 4 inch to 8 inch caliper trees.
Made of green polyethylene with scrim reinforcement, black polypro straps and nylon zippers.
2 water release points per bag.
Bag is empty in approximately 5 to 9 hours.
UV stabilized to withstand exposure to sunlight.
Fill opening fits up to 3" diameter hose.

DIRECTIONS FOR USE:

Place around tree trunk, with the zippers on uphill side of tree.
Wrap both sides around trunk until zippers meet and zip together from bottom to top.
Lift tag to expose fill opening at top of bag.
Insert hose into fill opening and begin filling with water.
Fill bag to 1/4 capacity.
Gently lift up on straps at top of bag to expand bottom.
Fill to desired level and let empty.
Continuously waters for approximately 5 to 9 hours.

MEASUREMENTS:

Full - 30" tall × 18" wide (at base)

WATERING CAPACITY / FREQUENCY CHART:

Treegator® Original Bag Setup	Trunk Caliper (diameter)	Approx. Water Capacity (per single bag)	Recommended Fills per Week
Single Bag Setup	1 to 2 inch (3 to 5 cm)	15 gallons (56.78 liters)	1 Fill per Week
	2 to 3 inch (5 to 8 cm)	14.75 to 14.25 gallons (55.84 to 53.96 liters)	2 Fills per Week
Double Bag Setup† (2 single bags)	0.00 inch (need-alone†)	25 gallons (94.63 liters)	Varies based on application
	4 to 5 inch (10 to 13 cm)	23.50 gallons (89.95 liters)	1 Fill per Week
	5 to 8 inch (12 to 20 cm)	22.75 to 21.5 gallons (86.11 to 81.38 liters)	2 Fills per Week

**Double Bag setup is two (2) single Treegator® Original bags zipped together back-to-back.*
†When watering older established trees with fully developed root systems, a Double Bag setup can also be used as a stand-alone watering solution (i.e. not wrapped around a trunk)

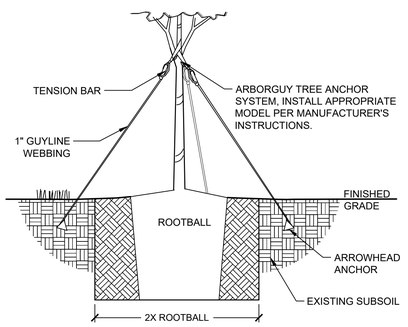

STAKING DETAIL

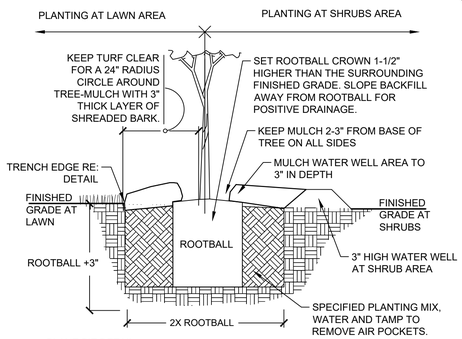

PLANT PIT DETAIL

1 TREE PLANTING-GUY STRAP

1" = 1'-0" P-MU-PIN-16

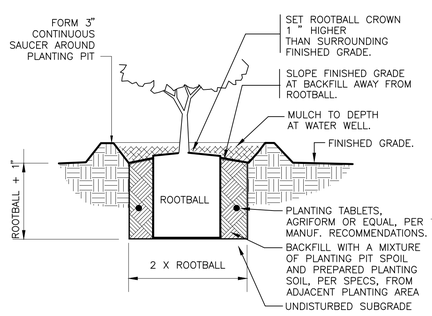

5 SHRUB PLANTING

1" = 1'-0" 329333.13-01

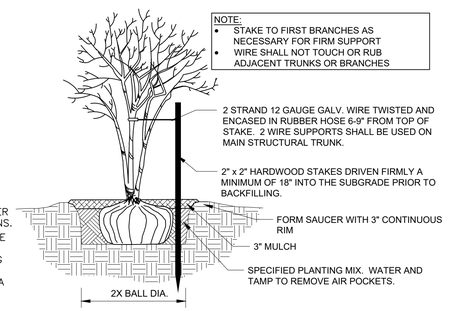

6 MULTI-TRUNK TREE STAKING

1/2" = 1'-0" 329343-01

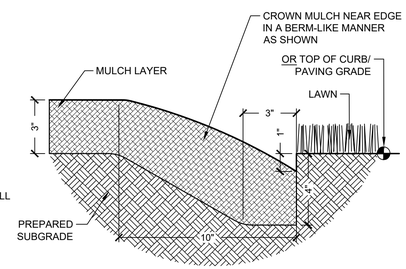

NOTE: TRENCH EDGE TO BE LOCATED BETWEEN ALL PLANTING BED AREAS AND ADJACENT TURF AREAS, UNLESS NOTED OTHERWISE.

2 TRENCH EDGE

3" = 1'-0" 329413.23-02

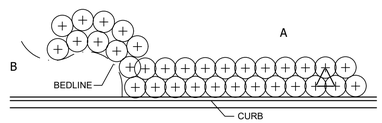

A SHRUBS AND GROUNDCOVERS ADJACENT TO STRAIGHT EDGES SHALL BE TRIANGULAR - SPACED IN ROWS PARALLED TO THE STRAIGHT EDGE.

B SHRUBS AND GROUNDCOVERS ADJACENT TO CURVED EDGES SHALL BE PLANTED IN ROWS PARALLEL TO THE CURVED EDGES. CURVED EDGES TO BE VERY SMOOTH RADII.

3 TYPICAL PLANT SPACING

NOT TO SCALE 329399-04

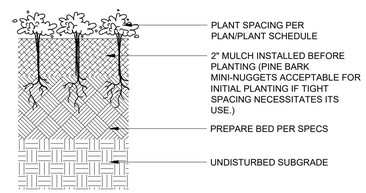

4 GROUNDCOVER PLANTING

3" = 1'-0" PLNT-GR-03

was DESIGN landscape architects
landscape architecture
land planning
placemaking
Foley, Alabama
P. 251.948.7181
Mobile, Alabama
P. 251.344.4023
Jackson, Mississippi
P. 601.790.0781
Pensacola, Florida
P. 850.203.4252
www.was-design.com

A Landscape Development Plan for
Lavretta Park
Pickleball Courts
PR-073-22 Mobile, Alabama

Revisions

No.	Date	Revisions / Submissions
	08.30.23	95% CONSTRUCTION DRAWINGS
	09.29.23	100% CONSTRUCTION DRAWINGS

© Copyright 2022 WAS Design Inc. These documents and their contents are the property of WAS Design. Any reproductions, revisions, modifications or use of these documents without the express written consent of WAS Desgin is prohibited by law.

ABS
Drawn
ABS
Project Manager
JEC
Principal
226010-025
Project No.
05.19.23
Date

Registration
STATE OF ALABAMA
JAMES ELLIS CROWE
No. 6
REGISTERED LANDSCAPE ARCHITECT

Sheet Title

LANDSCAPE PLANTING DETAILS

Sheet No.

LP500

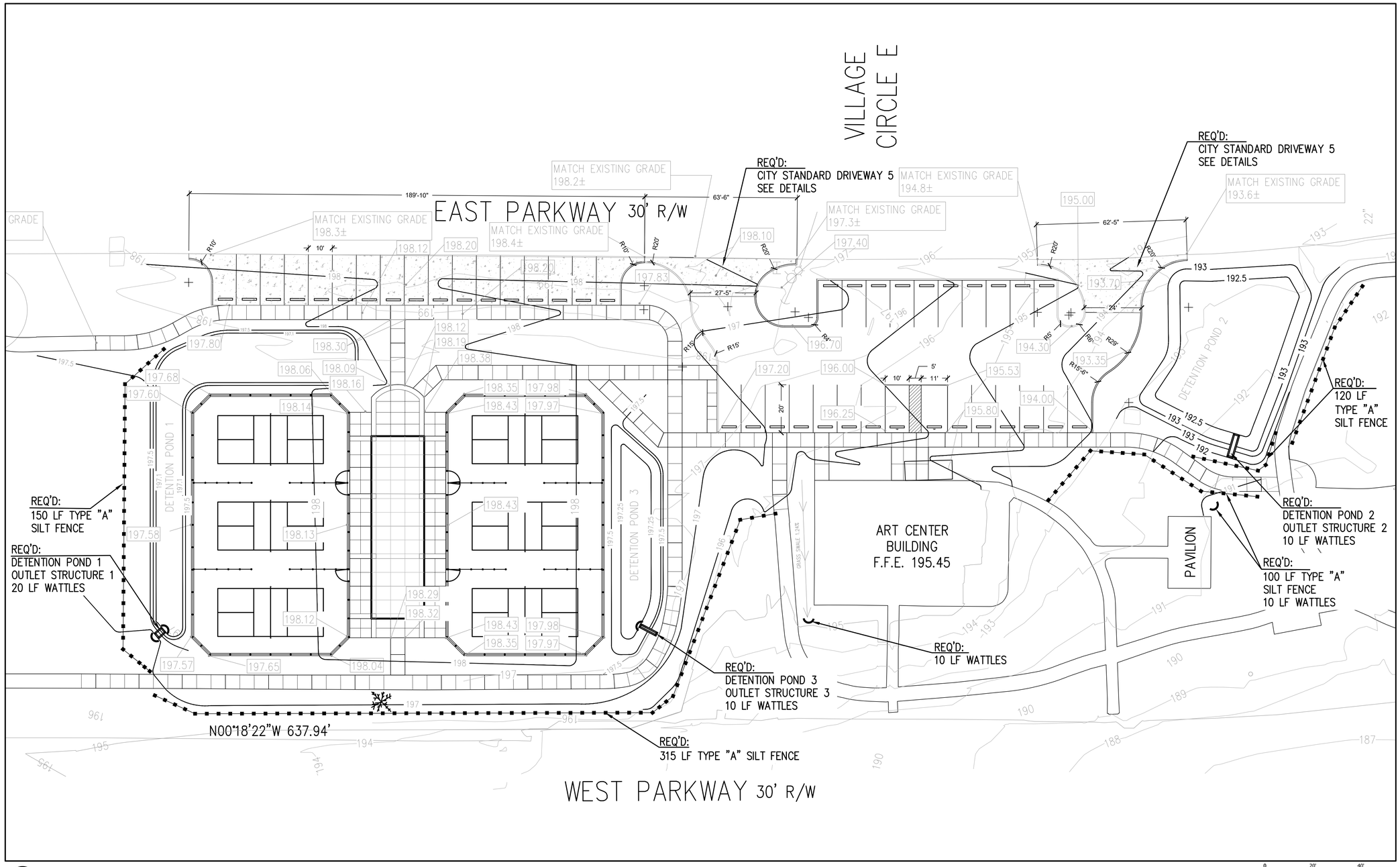

1 GRADING PLAN
Scale: 1" = 20'

landscape architecture
land planning
placemaking

Foley, Alabama
P. 251.948.7181
Mobile, Alabama
P. 251.344.4023
Jackson, Mississippi
P. 601.790.0781
Pensacola, Florida
P. 850.203.4252

WAS DESIGN
landscape architects
www.was-design.com

A Landscape Development Plan for
Lavretta Park Pickleball Courts
PR-073-22 Mobile, Alabama

Revisions

No.	Date	Revisions / Submissions
	08.30.23	95% CONSTRUCTION DRAWINGS
	09.29.23	100% CONSTRUCTION DRAWINGS

© Copyright 2022 WAS Design Inc. These documents and their contents are the property of WAS Design. Any reproductions, revisions, modifications or use of these documents without the express written consent of WAS Design is prohibited by law.

ABS
Drawn
ABS
Project Manager
JEC
Principal
226010-025
Project No.
05.19.23
Date

Registration

Sheet Title

CIVIL GRADING & DRAINAGE PLAN

Sheet No.
C1.1

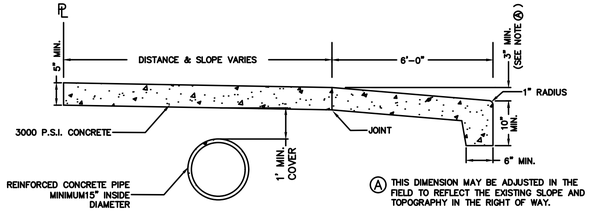

PROFILE VIEW OF CONCRETE DRIVEWAY

NOT TO SCALE

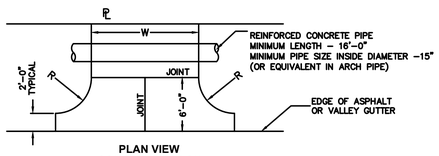

PLAN VIEW CONCRETE APRON OVER PIPE IN DRAINAGE DITCH

NOT TO SCALE

	MINIMUM*	TYPE
R	20'	COMMERCIAL
R	4'	RESIDENTIAL
W	24'	COMMERCIAL
W	12'	RESIDENTIAL

* IF SITE CONDITIONS PROHIBIT THE USE OF THESE STANDARDS, AN ALTERNATIVE MAY BE SUBMITTED FOR APPROVAL TO THE ENGINEERING DEPT.

NOTE: THIS STANDARD APPLIES TO BOTH RESIDENTIAL AND COMMERCIAL DRIVEWAYS. PIPE ONLY REQUIRED WHERE DRIVE CROSSES OPEN DITCH

Scale: 3/4"=1'

CITY OF MOBILE, ALABAMA
ENGINEERING DEPARTMENT
CONCRETE DRIVEWAY DETAILS
FOR ASPHALT ROADWAY W/O
CURB & GUTTER & SIDEWALK

STANDARD DRAWING 5	SHEET 1 OF 2	11-03-09

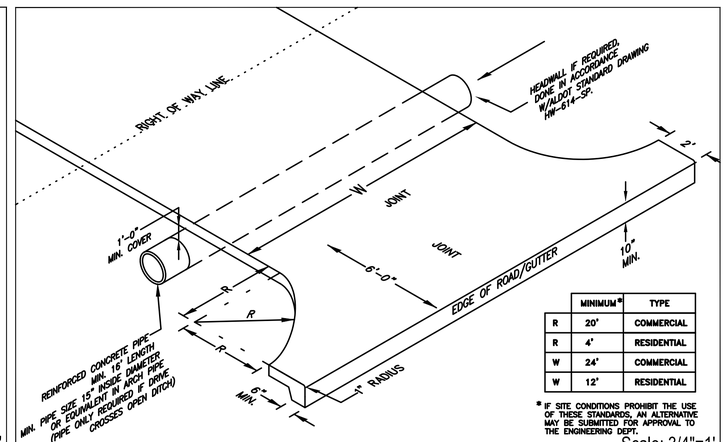

	MINIMUM*	TYPE
R	20'	COMMERCIAL
R	4'	RESIDENTIAL
W	24'	COMMERCIAL
W	12'	RESIDENTIAL

* IF SITE CONDITIONS PROHIBIT THE USE OF THESE STANDARDS, AN ALTERNATIVE MAY BE SUBMITTED FOR APPROVAL TO THE ENGINEERING DEPT.

NOTE: CONCRETE APRON AND DRIVEWAY TO BE 5" MIN. THICKNESS. ALL CONCRETE TO BE 3000 LB. MIX WITH NATURAL COLOR AND BROOM FINISH.

Scale: 3/4"=1'

CITY OF MOBILE, ALABAMA
ENGINEERING DEPARTMENT
CONCRETE DRIVEWAY DETAILS
FOR ASPHALT ROADWAY W/O
CURB & GUTTER & SIDEWALK

STANDARD DRAWING 5	SHEET 2 OF 2	11-03-09

was DESIGN landscape architects
landscape architecture
land planning
placemaking
Foley, Alabama
P. 251.948.7181
Mobile, Alabama
P. 251.344.4023
Jackson, Mississippi
P. 601.790.0781
Pensacola, Florida
P. 850.203.4252
www.was-design.com

A Landscape Development Plan for
Lavretta Park Pickleball Courts
PR-073-22 Mobile, Alabama

Revisions

No.	Date	Revisions / Submissions
	08.30.23	95% CONSTRUCTION DRAWINGS
	09.29.23	100% CONSTRUCTION DRAWINGS

© Copyright 2022 WAS Design Inc. These documents and their contents are the property of WAS Design. Any reproductions, revisions, modifications or use of these documents without the express written consent of WAS Desgin is prohibited by law.

ABS
Drawn
ABS
Project Manager
JEC
Principal
226010-025
Project No.
05.19.23
Date

Registration

Sheet Title

CIVIL DETAILS

Sheet No.

C1.2

1. The contractor shall notify the City of Mobile ROW Section via e-mail at rightofway.inspect@cityofmobile.org a minimum of 24 hours prior to beginning any work within the ROW or Public Easement for assignment of the City of Mobile ROW inspector. Prior notice applies to all activity within the ROW including mobilization, trenching, boring, concrete placement, etc. Failure to contact the City of Mobile ROW Section prior to beginning any work is a violation of the City of Mobile ROW Ordinance and may invoke enforcement action in the form of a Municipal Offense Ticket.
2. The ROW Permit shall expire upon the completion of the work or if there is any suspension in the progression of work greater than or equal to six (6) months from the date of permit approval. The City may require a submission of a schedule/deadline for completion of work. Permitted work in the ROW not completed in a timely manner is a violation of the City of Mobile ROW Ordinance and may invoke enforcement action in the form of a Municipal Offense Ticket.
3. The contractor shall schedule and obtain an approved formwork inspection from the assigned City of Mobile ROW inspector prior to placement of concrete to confirm minimum dimensional standards are met.
4. The permittee shall schedule and obtain an approved pipe inspection from the City of Mobile ROW inspector prior to placement of fill to confirm pipe joints are wrapped and no lifting holes are present.
5. The contractor shall immediately notify the City of Mobile ROW section via e-mail at rightofway.inspect@cityofmobile.org of any incidental damage to any City of Mobile facilities in the ROW or Public Easements including sidewalks, driveways, ADA ramps, curb and gutter, drainage structures and pipes, etc. The contractor shall be responsible for the repair of any damaged facilities to the City of Mobile standards, in a timely manner, and at no cost to the City of Mobile.
6. All work within the City of Mobile ROW or Public Easements must comply with the "Mobile Rights of Way Construction and Administration Ordinance". A copy of the ordinance may be found at the Municode website for the City of Mobile Ordinance Chapter 57, Article VIII.
7. All work in the ROW shall comply with the Stormwater Management and Flood Control Ordinance and Flood Plain Management Plan of the City of Mobile, Alabama, including but not limited to:
a. Do not alter the natural drainage flow pattern in the area of work.
b. Do not divert storm water onto adjacent property or increase the amount of natural drainage flow onto an adjacent property owner or prevent the natural flow of water in the area of work.
c. Do not fill wetlands without a permit from the US Army Corps of Engineers.
d. Do not fill within or alter a Special Flood Hazard Area (floodplain) without an engineered flood study or violate any of the requirements in Division 2 of the Stormwater Management and Flood Control Ordinance specifically.
8. With the exception of major roadway rehabilitations/improvements, all restoration work associated with excavations within a public roadway including the placement and compaction of sub-base, base, and bituminous or concrete pavement shall comply with City of Mobile Standard Drawings 11 (Sheets 1-3) (whichever is applicable). Refer to the standard drawing details included in this plan set.
9. The final resurfacing limits of any roadway restoration shall be at the discretion of the City Engineer, to be determined by a field inspection/site visit upon completion of the installation of all permitted infrastructure/facilities, prior to the contractor beginning paving.
10. All sidewalk construction in the ROW shall comply with City of Mobile Standard Drawing 12. Refer to the standard drawing details included in this plan set.
11. Sidewalks in the ROW shall not be obstructed, parked upon, or driven upon without explicit approval documented in writing or on the permitted plans. Failure to comply with this requirement may invoke enforcement action in the form of a Municipal Offense Ticket.
12. On substantial development/redevelopment projects, any sidewalk panels in the ROW which are cracked, have been shoved creating a tripping hazard, or those which have been worn to the extent that they create a slipping hazard, shall be replaced. The determination of this condition is ultimately the decision of the City.
13. All driveway apron construction in the ROW shall comply with City of Mobile Standard Drawings 3 (Sheets 1 and 2), 5/5 SW (Sheets 1 and 2), 6, or 10 (whichever is applicable). Refer to the standard drawing details included in this plan set.
14. All ADA ramps and landing construction in the ROW shall comply with City of Mobile Standard Drawings 7 (Sheets 1 and 2), 8 (Sheets 1 and 2), 9 (Sheets 1 and 2) (whichever is applicable). Refer to the standard drawing details included in this plan set. ADA compliant truncated dome panels shall be anchored and cast in place, not bolted down and retrofitted.
15. All control and expansion jointing in the ROW shall comply with the material and dimensional requirements on City of Mobile Standard Drawing 12. Wood shall not be used as expansion joint material. Expansion joints shall be required where any concrete structure abuts another concrete structure or non-yielding material. The spacing of control and expansion joints for various concrete structures shall be as follows: a. Sidewalks - Control joins shall be placed every 4 feet or equivalent with the width of the sidewalk (maximum 10 feet). Expansion joints shall be placed every 30 feet to 32 feet. b. Driveways and Curb and Gutter - Control joints shall be placed every 8 feet to 10 feet. Expansion joints shall be placed every 32 feet to 40 feet.
16. All storm drain pipe installed in the City of Mobile ROW, Public Easement, or carrying City of Mobile system stormwater shall have the joints wrapped with filter fabric, shall have no lifting holes (filling lifting holes is not allowed without explicit approval), shall be a minimum of 15 inch in diameter, and shall be Class III or stronger reinforced concrete pipe (RCP). The contractor needs to notify the pipe manufacturer ahead of time that the project is within the City of Mobile ROW to obtain pipe without lifting holes.
17. Storm drainage connections shall occur at the junction box or inlet. If there is not an existing inlet or junction box to connect to, then one shall be constructed in accordance with relevant ALDOT Standard and Special Drawings.
18. Any excess soil produced as a result from any excavation in the ROW shall be removed from the ROW.
19. No excavations in the ROW shall be left open overnight unless the excavation has been properly secured with appropriate safety equipment (e.g. steel plates, barricades, safety fencing/screening). Excavations in the ROW shall not be left open for excessive amounts of time regardless of safety equipment.
20. No excavations or jetting shall be done under the curbs and gutters, sidewalk, or driveways, or other hardscapes within the ROW without removal and replacement of the overlying structure. Boring, using a missile, or other methods which do not excavate and undermine the compaction of the underlying soil shall be permissible.
21. All disturbed areas in the neutral ground of the ROW shall be solid sodded or stabilized according to an approved landscaping plan. The sod shall be flush with the top of the sidewalk. If landscaping is present, the ROW shall be restored in kind. In some instances, at the discretion of the City, existing vegetation may require removal and restoration of existing bare areas may require placement of sod.
22. Installation of irrigation systems within the ROW shall require a separate ROW permit or shall be permitted by inclusion of an irrigation plan (including locations of meters, valves, sprinkler heads and spray direction/length) in the approved plans. The City reserves the right to remove irrigation in the ROW and assumes no liability for damages associated with irrigation systems.
23. All utility pipes, conduits, and facilities and associated excavation shall maintain a minimum 36 inches of separation (vertically, horizontally, or combination thereof) from City of Mobile storm drainage pipes and structures. If a minimum of 36 inches of separation cannot be maintained due to dimensional constraints in the field, as a condition of approval, the City of Mobile may require additional precautionary measures to be taken such as limiting excavation efforts to hand trenching, presence of a ROW inspector while probing, locating, and excavating within 36 inches of the pipe/structure, or the provision of post construction storm drainage videos. Please refer to any site-specific notes on the plan/profile sheets and/or cross-sections details as well as any conditions printed on the permit for any required work restrictions.
24. All utilities in the City of Mobile ROW shall be placed at a minimum depth of 36 inches and 48 inches outside and inside of roadways respective

SITE NOTES

1. ALL CONCRETE SHALL BE CLASS A, 3,000 PSI AT 28 DAYS COMPRESSIVE STRENGTH WITH A MAXIMUM SLUMP of 8" UNLESS NOTED OTHERWISE. ALL EXPOSED CONCRETE TO HAVE A FINE BROOM FINISH.
2. ALL MATERIALS SHALL BE NEW.

UTILITY PLAN NOTES

1. ALL WORK SHALL COMPLY WITH APPLICABLE STATE, FEDERAL, AND LOCAL CODES, AND ALL NECESSARY LICENSES AND PERMIT SHALL BE OBTAINED BY THE CONTRACTOR AT HIS EXPENSE UNLESS PREVIOUSLY OBTAINED BY THE OWNER/DEVELOPER.
2. THE CONTRACTOR SHALL IMMEDIATELY INFORM THE ENGINEER OF ANY DISCREPANCIES OR ERRORS HE DISCOVERS IN THE PLAN.
3. DEVIATION FROM THESE PLANS AND NOTES WITHOUT THE PRIOR CONSENT OF THE OWNER OR HIS REPRESENTATIVE OR THE ENGINEER MAY BE CAUSE FOR THE WORK TO BE UNACCEPTABLE.
4. THE CONTRACTOR SHALL BE REQUIRED TO USE THE ONE-CALL CENTER TELEPHONE NUMBER (800)292-8525, FOR THE PURPOSE OF COORDINATING THE MARKING OF UNDERGROUND UTILITIES.
5. IT IS THE RESPONSIBILITY OF THE CONTRACTOR TO DETERMINE THE LOCATION OF ALL EXISTING UNDERGROUND UTILITIES AND TO TAKE WHATEVER STEPS NECESSARY TO PROVIDE FOR THEIR PROTECTION. THE ENGINEER HAS DILIGENTLY ATTEMPTED TO LOCATE AND INDICATE ALL EXISTING FACILITIES ON THESE PLANS, HOWEVER, THIS INFORMATION IS SHOWN FOR THE CONTRACTOR'S CONVENIENCE ONLY. THE ENGINEER ASSUMES NO RESPONSIBILITY FOR THE LOCATIONS OF UTILITIES SHOWN OR NOT SHOWN. CONTRACTOR TO CONTACT THE UTILITY COMPANIES FOR EXACT LOCATION OF THEIR UTILITIES PRIOR TO STARTING CONSTRUCTION. ANY AND ALL DAMAGE MADE TO UTILITIES BY THE CONTRACTOR SHALL BE THE SOLE RESPONSIBILITY OF THE CONTRACTOR TO REPAIR AND REPLACE.
6. THE CONTRACTOR SHALL COORDINATE LOCATION AND INSTALLATION OF ALL UNDERGROUND UTILITIES AND APPURTENANCES TO MINIMIZE DISTURBING CURBING, PAVING, AND COMPACTED SUBGRADE.
7. ALL PIPE LENGTHS AND DISTANCES BETWEEN STRUCTURES ARE MEASURED FROM CENTER OF STRUCTURE TO CENTER OF STRUCTURE ALONG A HORIZONTAL PLANE.
8. CONTRACTOR SHALL COORDINATE WATER, AND SEWER INSTALLATION IN THE ROW WITH MOBILE AREA WATER & SEWER SYSTEM.
9. BEDDING REQUIREMENTS SPECIFIED HEREIN ARE TO BE CONSIDERED AS MINIMUMS FOR RELATIVELY DRY, STABLE EARTH CONDITIONS. ADDITIONAL BEDDING SHALL BE REQUIRED FOR ROCK TRENCHES AND WET AREAS. CONTRACTOR SHALL HAVE THE RESPONSIBILITY TO PROVIDE SUCH ADDITIONAL BEDDING AS MAY BE REQUIRED TO PROPERLY CONSTRUCT THE WORK.
10. ALL WATER & SEWER SHALL BE IN ACCORDANCE WITH THE LATEST CITY OF MOBILE PLUMBING CODE.

GRADING & DRAINAGE NOTES

1. ALL MATERIALS AND WORKMANSHIP PROPOSED WITHIN THE STATE RIGHT-OF-WAY SHALL CONFORM TO THE "ALABAMA DEPARTMENT OF TRANSPORTATION STANDARD SPECIFICATIONS FOR HIGHWAY CONSTRUCTION" (2008 EDITION).
2. THE CONTRACTOR SHALL FURNISH AND MAINTAIN ALL NECESSARY BARRICADES AROUND THE WORK AND SHALL PROVIDE PROTECTION AGAINST WATER DAMAGE AND SOIL EROSION.
3. ALL SILT BARRIERS MUST BE PLACED AS ACCESS IS OBTAINED DURING CLEARING. NO GRADING SHALL BE DONE UNTIL SILT BARRIER AND DETENTION FACILITIES ARE CONSTRUCTED.
4. ALL SEDIMENT CONTROL DEVICES ARE TO BE CONSTRUCTED AND FULLY OPERATIONAL PRIOR TO ANY OTHER CONSTRUCTION OR GRADING.
5. ALL SLOPES SHALL BE STABILIZED AS SOON AS POSSIBLE.
6. COMPACTION OF THE BACK FILL OF ALL TRENCHES SHALL BE COMPACTED TO THE DENSITY OF 95% OF THEORETICAL MAXIMUM DRY DENSITY (ASTM D698). BACK FILL MATERIAL SHALL BE FREE FROM ROOTS, STUMPS, OR OTHER FOREIGN DEBRIS AND SHALL BE PLACED AT OR NEAR OPTIMUM MOISTURE. CORRECTION OF ANY TRENCH SETTLEMENT WITHIN A YEAR FROM THE DATE OF APPROVAL WILL BE THE RESPONSIBILITY OF THE CONTRACTOR.
7. ALL FILL MATERIAL TO BE UTILIZED ON THE PROJECT SHALL BE FREE OF ORGANIC OR OTHERWISE DELETERIOUS MATERIALS AND COMPACTED TO MINIMUM DRY DENSITIES CORRESPONDING TO 95% OF MAXIMUM DRY DENSITY AS OBTAINED BY STANDARD PROCTOR, ASTM D698 AND AT LEAST 98% OF STANDARD PROCTOR WITHIN 1 FOOT BELOW PAVEMENT SUBGRADE. FILL SHALL BE PLACED IN LIFTS NOT TO EXCEED 6 INCHES IN COMPACTED FILL THICKNESS. A REPORT FROM A GEOTECHNICAL ENGINEER WILL BE REQUIRED BY THE LOCAL JURISDICTIONAL INSPECTOR.
8. MAXIMUM SLOPE OF EMBANKMENT SHALL BE AS SHOWN ON THE DRAWINGS.
9. PROPOSED CONTOUR INTERVALS ARE AS LABELED. ALL PROPOSED CONTOURS ARE FINISHED GRADE.
10. THE CONTRACTOR WILL INSURE THAT POSITIVE AND ADEQUATE DRAINAGE IS MAINTAINED AT ALL TIMES WITHIN THE PROJECT LIMITS. THIS MAY INCLUDE, BUT NOT BE LIMITED TO, REPLACEMENT OR RECONSTRUCTION OF EXISTING DRAINAGE STRUCTURES THAT HAVE BEEN DAMAGED OR REMOVED OR REGRADING AS REQUIRED BY THE ENGINEER, EXCEPT FOR THOSE DRAINAGE ITEMS SHOWN AT SPECIFIC LOCATIONS IN AND HAVING SPECIFIC PAY ITEMS IN THE DETAILED ESTIMATE. NO SEPARATE PAYMENT WILL BE MADE FOR ANY COSTS INCURRED TO COMPLY WITH THIS REQUIREMENT.
11. THE CONTRACTOR SHALL PROVIDE ANY EXCAVATION AND MATERIAL SAMPLES NECESSARY TO CONDUCT REQUIRED SOIL TESTS. ALL ARRANGEMENTS AND SCHEDULING FOR THE TESTING SHALL BE THE CONTRACTOR'S RESPONSIBILITY.
12. SOILS TESTING AND ON-SITE INSPECTION SHALL BE PERFORMED BY AN INDEPENDENT GEOTECHNICAL ENGINEER. ALL GEOTECHNICAL TESTING COSTS SHALL BE BORNE BY THE CONTRACTOR. THE SOILS ENGINEER SHALL PROVIDE COPIES OF TEST REPORTS TO THE CONTRACTOR, THE OWNER AND THE OWNER'S REPRESENTATIVE AND SHALL PROMPTLY NOTIFY THE OWNER, HIS REPRESENTATIVE AND THE CONTRACTOR SHOULD WORK PERFORMED BY THE CONTRACTOR FAIL TO MEET THESE SPECIFICATIONS.
13. ALL STORM DRAINAGE PIPE SHALL BE LAID ON SMOOTH CONTINUOUS GRADES WITH NO VISIBLE BENDS AT JOINTS.

TRAFFIC CONTROL NOTE:

1. CONTRACTOR SHALL BE RESPONSIBLE FOR TRAFFIC CONTROL IN ACCORDANCE WITH FEDERAL MANUAL ON UNIFORM TRAFFIC CONTROL DEVISES, LATEST EDITION, PART VI, REV. 3, SECTION 6F, DURING ANY CONSTRUCTION WITHIN RIGHT-OF-WAY ADJACENT TO ROADWAY.

DETENTION POND MAINTENANCE:

THE STORMWATER DETENTION POND MAINTENANCE IS THE OWNER'S RESPONSIBILITY (THE CITY OF MOBILE).

CITY OF MOBILE ENGINEERING DEPT. NOTES:

1. CONTRACTOR SHALL CONTACT CITY ENGINEERING DEPARTMENT VIA EMAIL AT LAND.DISTURBANCE@CITYOFMOBILE.ORG AT LEAST 24 HOURS PRIOR TO BEGINNING ANY WORK ON THIS SITE, TO SCHEDULE AN INITIAL ON-SITE BMP INSPECTION WITH THE APPROPRIATE CITY ENGINEER INSPECTOR. FAILURE TO CONTACT THE CITY ENGINEERING DEPARTMENT PRIOR TO BEGINNING ANY WORK IS A VIOLATION OF THE STORM WATER MANAGEMENT AND FLOOD CONTROL ORDINANCE.
2. THE CONTRACTOR SHALL SIZE, INSTALL, AND MAINTAIN ADEQUATE CONTROLS FOR THE SITE. REFER TO THE ALABAMA HANDBOOK FOR EROSION CONTROL, SEDIMENT CONTROL AND STORMWATER MANAGEMENT ON CONSTRUCTION SITES AND URBAN AREAS, LATEST EDITION.
3. THE CONTRACTOR IS RESPONSIBLE FOR DAILY INSPECTION AND CONTINUED MAINTENANCE OF EROSION CONTROL ELEMENTS.
4. ANY DISTURBED AREA(S) MAY NOT REMAIN DENUDED FOR LONGER THAN 10 DAYS.

WAS DESIGN landscape architects
landscape architecture
land planning
placemaking
Foley, Alabama P. 251.948.7181
Mobile, Alabama P. 251.344.4023
Jackson, Mississippi P. 601.790.0781
Pensacola, Florida P. 850.203.4252
www.was-design.com

A Landscape Development Plan for
Lavretta Park Pickleball Courts
PR-073-22 Mobile, Alabama

Revisions

No.	Date	Revisions / Submissions
	08.30.23	95% CONSTRUCTION DRAWINGS
	09.29.23	100% CONSTRUCTION DRAWINGS

© Copyright 2022 WAS Design Inc. These documents and their contents are the property of WAS Design. Any reproductions, revisions, modifications or use of these documents without the express written consent of WAS Design is prohibited by law.

ABS
Drawn
ABS
Project Manager
JEC
Principal
226010-025
Project No.
05.19.23
Date

Registration

Sheet Title

CIVIL NOTES

Sheet No.

C1.3

ABBREVIATIONS

A	AMPS
AC	ABOVE COUNTER
AF	AMP FRAME
AFF	ABOVE FINISHED FLOOR
AFG	ABOVE FINISHED GRADE
AHU	AIR HANDLING UNIT
AL	ALUMINUM
ARCH	ARCHITECT OR ARCHITECTURAL
AT	AMP TRIP
ATS	AUTOMATIC TRANSFER SWITCH
ATU	AIR TERMINAL UNIT
AWG	AMERICAN WIRE GAUGE
BAS	BUILDING AUTOMATION SYSTEM
BJ	BONDING JUMPER
BKR	CIRCUIT BREAKER
BLDG	BUILDING
BOD	BASIS OF DESIGN
C	CONDUIT
C/B	CIRCUIT BREAKER
CL	CURRENT LIMITING
C/L	CENTERLINE
CLG	CEILING
CKT	CIRCUIT
CT	CURRENT TRANSFORMER
CU	COPPER
DDC	DIRECT DIGITAL CONTROL
DEMO	DEMOLISH
EC	ELECTRICAL CONTRACTOR
EGC	EQUIPMENT GROUNDING CONDUCTOR
ELEC	ELECTRICAL
EMGB	ELECTRICAL MAIN GROUNDING BUSBAR
EF	EXHAUST FAN
EX	EXISTING TO REMAIN
EXT	EXTERIOR
EWC	ELECTRIC WATER COOLER
EMT	ELECTRICAL METALLIC TUBING
EQUIP	EQUIPMENT
FMC	FLEXIBLE METAL CONDUIT
FACP	FIRE ALARM SYSTEM CONTROL PANEL
FU	FUSE
F/A	FIRE ALARM
FLA	FULL LOAD AMPS
FLR	FLOOR
FVNR	FULL VOLTAGE NON-REVERSING
GFI	GROUND FAULT INTERRUPTER
G	GROUND (OR GFI FOR RECEPTACLE SUBSCRIPT)
GC	GENERAL CONTRACTOR
GND	GROUND
GEC	GROUNDING ELECTRODE CONDUCTOR
HH	HANDHOLE
HOA	HAND-OFF-AUTOMATIC
HP	HEAT PUMP OR HORSEPOWER
HVAC	HEATING, VENTILATION & AIR-CONDITIONING
IG	ISOLATED GROUND
IMC	INTERMEDIATE METAL CONDUIT
JB	JUNCTION BOX
k	KILO
kAIC	KILO-AMPERE INTERRUPTING CAPABILITY
kCMIL	THOUSAND CIRCULAR MILS
LCP	LIGHTING CONTROL PANEL
LTG	LIGHTING
LFMC	LIQUID TIGHT FLEXIBLE METAL CONDUIT
LV	LOW VOLTAGE
MAX	MAXIMUM
MCA	MINIMUM CIRCUIT AMPACITY
MCC	MOTOR CONTROL CENTER
MCE	MAIN COMMUNICATIONS EQUIPMENT ROOM
MCM	THOUSAND CIRCULAR MILS
MH	MANHOLE
MIN	MINIMUM
MISC	MISCELLANEOUS
MLO	MAIN LUGS ONLY
MNT	MOUNTING HEIGHT
MTG	MOUNTING
MTS	MANUAL TRANSFER SWITCH
MV	MEDIUM VOLTAGE
N1	NEMA 1
N3R	NEMA 3R
N/A	NOT APPLICABLE
NA	NOT APPLICABLE
NEC	NATIONAL ELECTRICAL CODE
NESC	NATIONAL ELECTRICAL SAFETY CODE
NEU	NEUTRAL
OCPD	OVERCURRENT PROTECTION DEVICE
OFOI	OWNER FURNISHED OWNER INSTALLED
OFCI	OWNER FURNISHED CONTRACTOR INSTALLED
OH	OVERHEAD
OHE	OVERHEAD ELECTRIC
OHP	OVERHEAD PRIMARY
OHS	OVERHEAD SECONDARY
PBD	PANELBOARD
PF	POWER FACTOR
PNL	PANELBOARD
PT	POTENTIAL TRANSFORMER
PWR	POWER
RCPT	RECEPTACLE
REQD	REQUIRED
RM	ROOM
RGS	RIGID GALVANIZED STEEL CONDUIT
RNC	RIGID NON-METALLIC CONDUIT
RVSS	REDUCED VOLTAGE SOLID STATE
SA	SURGE ARRESTER
SCA	SHORT CIRCUIT AMPS
SF	SUPPLY FAN
SPEC	SPECIFICATION
SWBD	SWITCHBOARD
SWGR	SWITCHGEAR
TBB	TELECOMMUNICATIONS BONDING BACKBONE
TR	TELECOMMUNICATIONS ROOM
TGB	TELECOMMUNICATIONS GROUNDING BUSBAR
TMGB	TELECOMMUNICATIONS MAIN GROUNDING BUSBAR
TVSS	TRANSIENT VOLTAGE SURGE SUPPRESSION
TYP	TYPICAL
UFR	UNDERFLOOR RACEWAY
UG	UNDERGROUND
UGE	UNDERGROUND ELECTRIC
UGP	UNDERGROUND PRIMARY
UGS	UNDERGROUND SECONDARY
UL	UNDERWRITERS' LABORATORIES
UNO	UNLESS NOTED OTHERWISE
UPS	UNINTERRUPTIBLE POWER SUPPLY
V	VOLT
VA	VOLT-AMPERES
VAR	VOLT-AMPERES REACTIVE
VAV	VARIABLE AIR VOLUME UNIT
W	WATTS
WAO	WORK AREA OUTLET
WP	WEATHERPROOF
WSR	WITHSTAND RATING
XFMR	TRANSFORMER
XP	EXPLOSION PROOF
ϕ	PHASE
72°	DEGREES
Δ	DELTA
Ω	OHMS

ELECTRICAL NOTES

1. ENTIRE ELECTRICAL INSTALLATION SHALL BE IN ACCORDANCE WITH THE LATEST EDITION OF THE NATIONAL ELECTRICAL CODE.
2. CONDUIT ROUTINGS AND DEVICE/EQUIPMENT LOCATIONS SHOWN ARE DIAGRAMMATIC ONLY, CONTRACTOR SHALL FIELD ROUTE AND LOCATE AS REQUIRED. CONDUIT ROUTINGS SHALL BE NORTH/SOUTH OR EAST/WEST.
3. ALL ELECTRICAL EQUIPMENT AND DEVICES SHALL BE PROVIDED WITH SUITABLE PHENOLIC NAMEPLATES.
4. FOR OTHER THAN LIGHTING FIXTURES, CATALOG NUMBERS AND MANUFACTURERS SHOWN ARE TO INDICATE DEVICE, QUALITY, AND TYPE OF ITEM DESIRED ONLY. ANY SUBSTITUTION ON THE LIGHTING FIXTURES MUST BE PREAPPROVED TWO WEEKS PRIOR TO BID.
5. THE LOADS SHOWN FOR APPLIANCES AND EQUIPMENT ARE BASED ON DESIGN INFORMATION. THE CONTRACTOR SHALL VERIFY ALL APPLIANCE LOADS PRIOR TO RUNNING THE CIRCUIT. THE MINIMUM CIRCUIT REQUIREMENTS SHALL BE BASED ON THE APPLIANCE NAMEPLATE VALUE OR CODE REQUIREMENTS, WHICHEVER IS MORE STRINGENT. ADDITIONAL COMPENSATION SHALL NOT BE ALLOWED FOR APPLIANCE MODIFICATIONS BY THE CONTRACTOR.
6. COORDINATE LOCATIONS OF ELECTRICAL EQUIPMENT, DEVICES, OUTLETS, FIXTURES, ETC., WITH ARCHITECTURAL PLANS, ELEVATIONS AND REFLECTED CEILING PLANS PRIOR TO ROUGH-IN WORK.
7. ALL CONDUITS NOT LOCATED UNDER SLAB SHALL HAVE A MINIMUM BURIAL DEPTH OF 36" UNLESS NOTED OTHERWISE.
8. CONTRACTOR SHALL COORDINATE ALL WORK WITH OTHER TRADES PRIOR TO INSTALLATION. REFER TO LANDSCAPE DRAWINGS FOR EXACT LOCATION AND SIZE OF EQUIPMENT WHICH ARE PROVIDED BY OTHERS AND CONNECTED BY ELECTRICAL.
9. RECEPTACLES, SWITCHES COLOR SHALL BE SELECTED BY THE OWNER / ARCHITECT FROM STANDARD COLORS. ALL COVER PLATES SHALL BE SELECTED BY THE ARCHITECT.
10. CONDUITS LEAVING OR ENTERING BUILDING SHALL BE SEALED PER N.E.C. TO PREVENT ENTRANCE OF MOISTURE.
11. ALL DIMENSIONS TO DEVICES AFF SHALL BE TO CENTERLINE UNLESS NOTED OTHERWISE.
12. WORKING SPACE OF 36" FOR 120/240 SYSTEMS SHALL BE MAINTAINED IN FRONT OF ALL ELECTRICAL PANELS AND DEVICES.
13. ALL SIDEWALKS AND PARKING LOT ASPHALT AREAS THAT ARE CUT DUE TO NEW ELECTRICAL SERVICES SHALL BE REPAIRED TO MATCH EXISTING.
14. FINAL CONNECTION TO ALL EQUIPMENT IS SHOWN DIAGRAMMATIC. PROVIDE FINAL CONNECTION AS REQUIRED PER MANUFACTURER OF EQUIPMENT.
15. THE ELECTRICAL CONTRACTOR IS RESPONSIBLE FOR ALL CHARGES, PERMITS, FEES, ETC. RELATED TO THE CONSTRUCTION.

ELECTRICAL LEGEND

GENERAL ELECTRICAL DEVICES:

DUPLEX RECEPTACLE NEMA 5-20R. MOUNT 18" AFF UNLESS NOTED OTHERWISE. VERIFY DUPLEX MOUNTING REQUIREMENTS WITH ARCHITECTURAL DRAWINGS PRIOR TO ROUGH-IN. SUBSCRIPT INDICATES AS FOLLOWS:

G - GROUND FAULT CIRCUIT INTERRUPTER TYPE.
WP - GFI DEVICE WITH DIECAST WEATHERPROOF BACKBOX & DIECAST WEATHERPROOF (IN-USE) COVERPLATE. IN EXTERIOR LOCATIONS MOUNT 30" AFG. WEATHERPROOF OUTLET BOX COVERPLATES ARE TO BE LISTED AND IDENTIFIED AS "EXTRA-DUTY".
EWC - CONCEAL RECEPTACLE BEHIND EWC (COORDINATE WITH DIVISION 15).
84" - MOUNTING HEIGHT OF DEVICE AFF.
21 - # INDICATES PANELBOARD CKT NUMBER

DISTRIBUTION & POWER EQUIPMENT:

PANELBOARD. MOUNT AS INDICATED. SEE PANELBOARD SCHEDULES.

NON-FUSED GENERAL DUTY SAFETY SWITCH. SIZE FOR LOAD BEING SERVED.

SITE EQUIPMENT:

HANDHOLE. SEE DETAIL.

OTHER:

CIRCUIT RUN CONCEALED ABOVE CEILING OR IN WALL.

CIRCUIT RUN CONCEALED IN OR BELOW FLOOR SLAB OR UNDERGROUND.

2P2-9 HOMERUN TO PANELBOARD. ANY CIRCUIT WITHOUT FURTHER DESIGNATION SHALL BE 2#12,#12G,1/2"C. TICK MARKS INDICATE # OF CONDUCTORS (EGC NOT SHOWN). MINIMUM SIZE ON 120V HOMERUNS GREATER THAN 50 FEET SHALL BE #10 AWG. MINIMUM SIZE ON 120V HOMERUNS GREATER THAN 100 FEET SHALL BE #8 AWG. MINIMUM SIZE ON 120V HOMERUNS GREATER THAN 160 FEET SHALL BE #6 AWG. MINIMUM SIZE ON 277V HOMERUNS GREATER THAN 100 FEET SHALL BE #10 AWG. INCREASE CONDUIT SIZE AS REQUIRED PER NEC. UNDERLINED TEXT INDICATES CIRCUIT DESIGNATION.

F2L LIGHT FIXTURE IDENTIFICATION TAG. SEE LIGHT FIXTURE SCHEDULE FOR SYMBOLS & DETAILS.

1 SHEET NOTE TAG.

4LP1 PANELBOARD, SWITCHBOARD, TRANSFORMER & ELECTRICAL EQUIPMENT IDENTIFICATION TAG.

LEADERS.

ELECTRICAL SPECIFICATIONS

1. GENERAL ELECTRICAL:
   - 1.1. THE CONTRACTOR SHALL FURNISH ALL LABOR, MATERIALS AND EQUIPMENT NECESSARY FOR THE INSTALLATION OF A COMPLETE ELECTRICAL SYSTEM AS INDICATED WITHIN THESE DRAWINGS. ALL WORK SHALL BE INSTALLED IN STRICT ACCORDANCE WITH ALL APPLICABLE CODES AND ORDINANCES AND WITH MANUFACTURER'S RECOMMENDATIONS.
   - 1.2. THE CONTRACTOR SHALL CAREFULLY EXAMINE THE ARCHITECTURAL, STRUCTURAL, ELECTRICAL AND MECHANICAL DRAWINGS PRIOR TO SUBMITTING HIS BID. THE CONTRACTOR WILL BE REQUIRED TO FURNISH, INSTALL AND CONNECT ALL ITEMS AS INDICATED ON THE DRAWINGS.
   - 1.3. THE ARCHITECT SHALL BE NOTIFIED OF ANY CONFLICTS, OR INTERFERENCES THAT OCCUR BETWEEN INDIVIDUAL DRAWINGS.
   - 1.4. ALL MATERIALS AND EQUIPMENT SHALL BE INSTALLED IN A NEAT, FIRST CLASS, WORKMANLIKE MANNER, TO THE APPROVAL OF THE ARCHITECT/ENGINEER AND GOVERNING AUTHORITIES.
   - 1.5. IN ADDITION TO THE MANUFACTURERS STANDARD GUARANTEES, THE CONTRACTOR SHALL GUARANTEE ALL MATERIALS, EQUIPMENT AND WORKMANSHIP AGAINST DEFECTS FOR ONE YEAR FROM THE DATE OF FINAL ACCEPTANCE, AND SHALL CORRECT ANY DEFECTS AT NO ADDITIONAL COST TO THE OWNER. ALL LAMPS SHALL BE GUARANTEED FOR 30 DAYS AFTER ACCEPTANCE.
   - 1.6. THE LOADS SHOWN FOR APPLIANCES AND EQUIPMENT ARE BASED ON DESIGN INFORMATION. THE CONTRACTOR SHALL VERIFY ALL APPLIANCE LOADS PRIOR TO RUNNING THE CIRCUIT. THE MINIMUM CIRCUIT REQUIREMENTS SHALL BE BASED ON THE APPLIANCE NAMEPLATE VALUE OR CODE REQUIREMENTS, WHICHEVER IS MORE STRINGENT. ADDITIONAL COMPENSATION SHALL NOT BE ALLOWED FOR APPLIANCE MODIFICATIONS BY THE CONTRACTOR.
   - 1.7. PRIOR APPROVAL: PRIOR APPROVAL SHALL BE REQUIRED FOR ANY MANUFACTURER OTHER THAN THOSE LISTED FOR ALL SPECIFIED ITEMS IN THESE DRAWINGS. SUBMIT ALL REQUESTS FOR PRIOR APPROVAL 2 WEEKS PRIOR TO BID OPENING. ENGINEER'S APPROVAL WILL BE IN THE FORM OF AN ADDENDUM.

2. CODES & STANDARDS:
   - 2.1. INSTALLATION AND MATERIALS SHALL COMPLY WITH THE LATEST ADOPTED EDITION OF THE FOLLOWING CODES & STANDARDS:
     - 2.1.1. NATIONAL ELECTRICAL CODE.
     - 2.1.2. NFPA 72. NATIONAL FIRE PROTECTION CODE.
     - 2.1.3. INTERNATIONAL BUILDING CODE.
     - 2.1.4. INTERNATIONAL ENERGY CONSERVATION CODE.
     - 2.1.5. NFPA 101.
     - 2.1.6. ADA .
     - 2.1.7. ANSI.
     - 2.1.8. NEMA.
     - 2.1.9. OSHA.
     - 2.1.10. UL.

3. ALTERATIONS & ADDITIONS TO EXISTING WORK:
   - 3.1. PROVIDE ALL NECESSARY ADDITIONS AND ALTERATIONS TO EXISTING WORK AS REQUIRED TO PROVIDE AND MAINTAIN A COMPLETE AND PROPER ELECTRICAL INSTALLATION.
   - 3.2. AS NECESSARY, RELOCATE EXISTING ELECTRICAL WORK SO OTHER TRADES CAN PURSUE THEIR WORK.
   - 3.3. MAINTAIN POWER TO EXISTING PORTIONS OF BUILDINGS FED FROM OR THROUGH AREA IN SCOPE OF THIS CONTRACT.
   - 3.4. COORDINATE ALL REQUIRED OUTAGES WITH OWNER.

4. BASIC MATERIALS & METHODS:
   - 4.1. ALL POWER AND DISTRIBUTION CABLING SHALL BE COPPER TYPE THWN/THHN.
   - 4.2. ALL ELECTRICAL EQUIPMENT, DEVICES, ETC. LOCATED OUTDOORS SHALL BE WEATHERPROOF.
   - 4.3. ELECTRICAL CONTRACTOR SHALL PROVIDE ADEQUATE AND PROPER SUPPORT FOR ALL ELECTRICAL OUTLETS, DEVICES, LIGHT FIXTURES, ETC. BUILT IN OR MOUNTED ON CEILINGS.
   - 4.4. CONDUIT ROUTINGS AND DEVICE/EQUIPMENT LOCATIONS SHOWN ARE DIAGRAMMATIC ONLY, CONTRACTOR SHALL FIELD ROUTE AND LOCATE AS REQUIRED. CONDUIT ROUTINGS SHALL BE PARALLEL OR PERPENDICULAR TO BUILDING LINES.
   - 4.5. COORDINATE ALL ELECTRICAL WORK WITH OTHER TRADES AND STRUCTURAL COMPONENTS.
   - 4.6. THE CONDUIT MATERIAL SHALL BE AS FOLLOWS:
     - 4.6.1. BELOW GRADE - RNC (POWER & SITE LIGHTING ONLY). ELBOWS >1-1/2" SHALL BE RGS.
     - 4.6.2. RISER FROM 36" BELOW GRADE - RGS.
     - 4.6.3. CONCEALED RISER FROM 36" BELOW GRADE - RNC (POWER ONLY).
     - 4.6.4. ABOVE GRADE SUBJECT TO PHYSICAL ABUSE - RGS.
     - 4.6.5. ABOVE GRADE NOT SUBJECT TO PHYSICAL ABUSE OR WEATHER - EMT.
     - 4.6.6. INDOORS NOT SUBJECT TO PHYSICAL ABUSE - EMT. OR METAL CLAD CABLE(AS ALLOWED BY LOCAL AUTHORITY HAVING JURISDICTION).
     - 4.6.7. FINAL CONDUIT CONNECTIONS TO HEAT PUMPS, AIR HANDLERS, EXHAUST FANS, AND WATER HEATERS SHALL BE LFMC WHETHER INTERIOR OR EXTERIOR.
   - 4.7. CONDUIT FITTINGS SHALL BE AS FOLLOWS:
     - 4.7.1. EMT - <=2" USE STEEL SET SCREW WITH INSULATED THROATS FOR INTERIOR/ USE COMPRESSION FITTINGS WITH INSULATED THROATS FOR EXTERIOR, >2" USE SET-SCREW STEEL WITH INSULATED THROATS.
     - 4.7.2. RGS - THREADED GALVANIZED STEEL.
     - 4.7.3. PVC - PVC APPROVED FOR THE USE.
     - 4.7.4. FMC - ZINC-PLATED STEEL OR CADMIUM-PLATED MALLEABLE IRON SCREW TYPE WITH INSULATED THROAT.
     - 4.7.5. LFMC - CADMIUM-PLATED MALLEABLE IRON OR STEEL COMPRESSION TYPE WITH INSULATED THROAT.
   - 4.8. ALL OUTLET BOXES SHALL BE 4"X4"X1-1/2" DEEP MINIMUM.
   - 4.9. ALL SIDEWALKS AND PARKING LOT ASPHALT AREAS THAT ARE CUT DUE TO NEW ELECTRICAL SERVICES SHALL BE REPAIRED TO MATCH EXISTING.
   - 4.10. ALL DIMENSIONS TO DEVICES AFF SHALL BE TO CENTERLINE UNLESS NOTED OTHERWISE.
   - 4.11. COORDINATE LOCATIONS OF ELECTRICAL EQUIPMENT, DEVICES, OUTLETS, FIXTURES, ETC., WITH ARCHITECTURAL PLANS, ELEVATIONS AND REFLECTED CEILING PLANS PRIOR TO ROUGH-IN WORK.

5. GROUNDING & BONDING:
   - 5.1. PROVIDE AN INSULATED EQUIPMENT GROUNDING CONDUCTOR IN ALL CONDUITS.
   - 5.2. GROUND RODS SHALL BE 3/4"X20' COPPERCLAD STEEL.
   - 5.3. BELOW GRADE CONNECTIONS SHALL BE EXOTHERMIC TYPE.
   - 5.4. ALL CABLES SHALL BE COPPER, ALL BOLTED CONNECTIONS SHALL BE BRONZE.
   - 5.5. PROVIDE A #6AWG MINIMUM GROUND IN EMT FROM EACH TELCOM BACKBOARD TO THE MAIN ELECTRICAL SERVICE GROUND.
   - 5.6. WHERE AVAILABLE, BOND TO BUILDING STRUCTURAL STEEL, BUILDING FOUNDATION STEEL, METAL WATER SERVICE PIPING.
   - 5.7. PROVIDE THREE 20' GROUND RODS IN TRIANGLE ARRANGEMENT ON 20' CENTERS FOR MADE ELECTRODE SYSTEM. MEASURE RESISTANCE AND ENSURE <25 OHMS.

6. IDENTIFICATION:
   - 6.1. PROVIDE ENGRAVED 1"X3" PHENOLIC LABELS FOR ALL PANELBOARDS, SAFETY SWITCHES, TRANSFORMERS, CABINETS, ETC.
   - 6.2. PAINT THE RACEWAY SYSTEM COUPLINGS AND BOX COVERS ABOVE CEILINGS FOR THE FOLLOWING SYSTEMS AS FOLLOWS:
     - 6.2.1. 240 VOLT SYSTEMS - BLACK.
     - 6.2.2. AFTER PAINTING, WRITE THE CIRCUIT NUMBER (I.E. "LPA-34") ON ALL BRANCH CIRCUIT JUNCTION BOX COVERS ABOVE CEILING WITH WHITE MARKER.

7. GENERAL WIRING DEVICES:
   - 7.1. SWITCHES - SPECIFICATION GRADE, 20 AMP, COLOR BY ARCHITECT.
   - 7.2. RECEPTACLES - SPECIFICATION GRADE, 20 AMP, NEMA 5-20R, COLOR BY ARCHITECT.
   - 7.3. COVER PLATES - NYLON, COLOR BY ARCHITECT.
   - 7.4. SPECIAL RECEPTACLES - PER THE DRAWINGS, VERIFY WITH EQUIPMENT BEING SUPPLIED.
   - 7.5. APPROVED MANUFACTURERS - HUBBELL, LEVITON, EAGLE, PASS & SEYMOUR.

8. SAFETY SWITCHES:
   - 8.1. GENERAL DUTY, VISIBLE BLADE, LOCKABLE, QUICK-MAKE/QUICK-BREAK, HORSEPOWER RATED, FUSED WHERE INDICATED.
   - 8.2. PROVIDE WITH GROUND LUG KIT.
   - 8.3. INTERIOR - NEMA 1.
   - 8.4. EXTERIOR - NEMA 3R.
   - 8.5. APPROVED MANUFACTURERS - SQUARE D, GENERAL ELECTRIC, SIEMENS.

9. PANELBOARDS:
   - 9.1. FRONT ACCESSIBLE, BOLT-ON MOLDED CASE C/Bs, COPPER PHASE & NEUTRAL BUSSING, COPPER GROUND BAR, FULLY RATED (SERIES RATING NOT ALLOWED).
   - 9.2. ENCLOSURES SHALL BE DOOR-IN-DOOR CONSTRUCTION.
   - 9.3. INTERIOR - NEMA 1.
   - 9.4. ALL INTERIOR PANELBOARDS ARE TO HAVE FOUR SPARE 3/4" CONDUITS INSTALLED TO AN ACCESSIBLE SPACE FOR FUTURE.
   - 9.5. EXTERIOR - NEMA 3R.
   - 9.6. PROVIDE TYPE-WRITTEN DIRECTORY IN CLEAR SLEEVE ON INSIDE OF DOOR.
   - 9.7. APPROVED MANUFACTURERS - SQUARE D, GENERAL ELECTRIC, SIEMENS.

SCOPE OF WORK - LAVRETTA PARK

THE BASE BID SCOPE OF WORK INCLUDES:

1. NEW SERVICE FOR THE NEW LIGHTING AND RECEPTACLES INCLUDING ALL ASSOCIATED PANELS, CONDUCTORS, CONDUIT, BOXES, ETC. AS REQUIRED FOR A FULLY FUNCTIONAL SYSTEM.
2. NEW PARKING LOT LIGHTING AND ALL ASSOCIATED CONDUCTORS, CONDUIT, BOXES, ETC. AS REQUIRED FOR A FULLY FUNCTIONAL SYSTEM.
3. NEW PAVILION LIGHTING, RECEPTACLES AND ALL ASSOCIATED CONDUCTORS, CONDUIT, BOXES, ETC. AS REQUIRED FOR A FULLY FUNCTIONAL SYSTEM.
4. NEW CONDUIT AND HANDHOLES FOR PICKLEBALL COURT LIGHTING.

THE ALTERNATE SCOPE OF WORK INCLUDES:

1. A NEW FULLY OPERATIONAL MUSCO SYSTEM (INCLUDING CONTROLLER, PROGRAMMING, FIXTURES, POLES, ALL ASSOCIATED CONDUCTORS AND HARDWARE, ETC.) IS TO BE FURNISHED AND INSTALLED BY THE ELECTRICAL CONTRACTOR AS AN ADDITIVE ALTERNATE. THE SYSTEM IS TO BE INSTALLED PER MUSCO'S SPECIFICATIONS AND DIRECTION.

dell consulting
MEP Engineering
Christina Marie 50660
Alabama Certificate Number CA-4146-E
813 Downtowner Blvd. Ste. D
Mobile, Alabama 36609
P: 251-316-0015 F: 850-332-6629
DELL CONSULTING PROJECT: 23-053

was DESIGN landscape architects
landscape architecture
land planning
placemaking
Foley, Alabama P. 251.948.7181
Mobile, Alabama P. 251.344.4023
Jackson, Mississippi P. 601.790.0781
Pensacola, Florida P. 850.203.4252
www.was-design.com

A Landscape Development Plan for
Lavretta Park
Pickleball Courts
PR-073-22 Mobile, Alabama

Revisions

No.	Date	Revisions / Submissions
	08.30.23	95% CONSTRUCTION DRAWINGS
	09.29.23	100% CONSTRUCTION DRAWINGS

© Copyright 2022 WAS Design Inc. These documents and their contents are the property of WAS Design. Any reproductions, revisions, modifications or use of these documents without the express written consent of WAS Design is prohibited by law.

CM
Drawn:
Project Manager:
Principal:
Project No.
September 29, 2023
Date:

Registration:
ALABAMA LICENSED No. 50660 PROFESSIONAL ENGINEER CHRISTINA MARIE DELL
09/29/23
Drawings not valid without seal

Sheet: Title

ELECTRICAL LEGEND AND SPECIFICATIONS

Sheet No.

E100

dell consulting
MEP Engineering
Christina Marie 50660
Alabama Certificate Number CA-4146-E
813 Downtowner Blvd. Ste. D
Mobile, Alabama 36609
P: 251-316-0015 F: 850-332-6629
DELL CONSULTING PROJECT: 23-053

N

1 ELECTRIAL SITE PLAN - EXISTING

50' 0' 50' 100'

SCALE: 1"=50'-0"

GENERAL NOTE(S)

1. IT IS THE RESPONSIBILITY OF THE CONTRACTOR TO LOCATE ALL UNDERGROUND UTILITIES. NEW CONDUITS INSTALLED ARE TO BE INSTALLED TO AVOID CONFLICT WITH EXISTING TREE ROOT SYSTEMS AS WELL AS EXISTING UTILITIES.

SHEET NOTES

1. APPROXIMATE LOCATION OF EXISTING LIGHT POLE TO BE COMPLETELY REMOVED. THE ELECTRICAL CONTRACTOR IS TO REMOVE THE POLE TO AT LEAST 2' BELOW FINAL FINISHED GRADE. ALL CONDUIT, WIRE, ETC. ASSOCIATED WITH THE POLE IS TO BE COMPLETELY REMOVED. FOR ANY PHONE, CABLE, ETC. UTILITY USING THIS POLE AS SUPPORT FOR THEIR LINE IS TO BE COORDINATED WITH THAT COMPANY TO BE RELOCATED.

2. APPROXIMATE LOCATION OF EXISTING UTILITY POLE TO REMAIN. FIELD VERIFY EXACT LOCATION.

was DESIGN landscape architects
landscape architecture
land planning
placemaking
Foley, Alabama
P. 251.948.7181
Mobile, Alabama
P. 251.344.4023
Jackson, Mississippi
P. 601.790.0781
Pensacola, Florida
P. 850.203.4252
www.was-design.com

A Landscape Development Plan for
Lavretta Park Pickleball Courts
PR-073-22 Mobile, Alabama

Revisions

No.	Date	Revisions / Submissions
	08.30.23	95% CONSTRUCTION DRAWINGS
	09.29.23	100% CONSTRUCTION DRAWINGS

© Copyright 2022 WAS Design Inc. These documents and their contents are the property of WAS Design. Any reproductions, revisions, modifications or use of these documents without the express written consent of WAS Design is prohibited by law.

CM
Drawn:
Project Manager:
Principal:
Project No.:
September 29, 2023
Date:

Registration:
ALABAMA LICENSED No. 50660 PROFESSIONAL ENGINEER CHRISTINA MARIE DELL
09/29/2023
Drawings not valid without seal

Sheet Title:

ELECTICAL SITE PLAN - EXISTING

Sheet No.
E200

dell consulting
MEP Engineering
Christina Marie 50660
Alabama Certificate Number CA-4146-E
813 Downtowner Blvd. Ste. D
Mobile, Alabama 36609
P: 251-316-0015 F: 850-332-6629
DELL CONSULTING PROJECT: 23-053

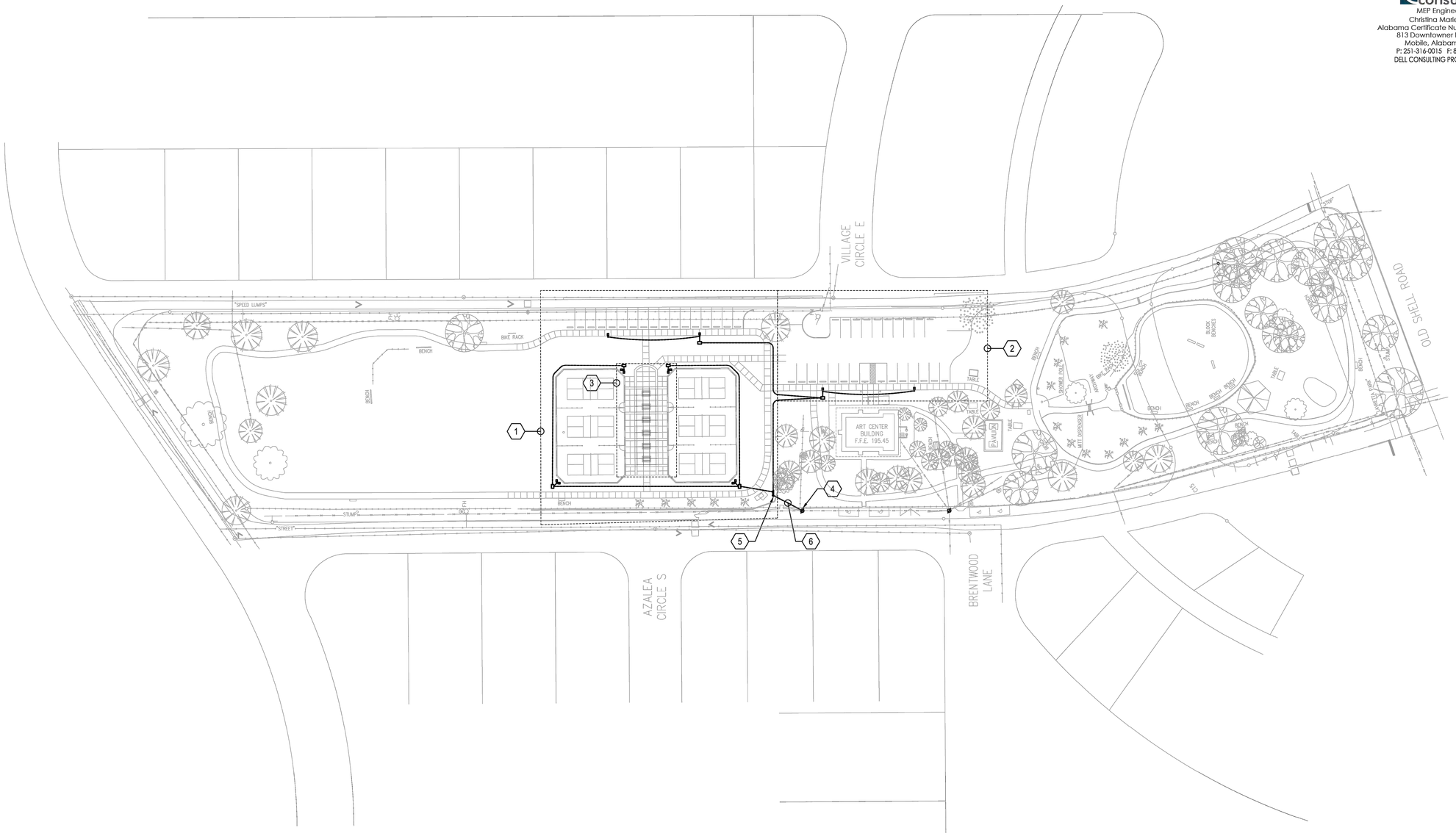

N

1 ELECTRICAL SITE PLAN - NEW WORK

50' 0' 50' 100'

SCALE: 1"=50'-0"

SHEET NOTES

1. LOCATION OF NEW PICKLEBALL COURTS - SEE ENLARGED PLAN FOR MORE INFORMATION.
2. LOCATION OF NEW PARKING LOT - SEE ENLARGED PLAN FOR MORE INFORMATION.
3. LOCATION OF NEW PAVILION - SEE ENLARGED PLAN FOR MORE INFORMATION.
4. APPROXIMATE LOCATION OF NEW 1Ø 240 VOLT TRANSFORMER ON EXISTING UTILITY POLE PROVIDED AND INSTALLED BY THE UTILITY COMPANY. COORDINATE ALL ASPECTS OF THE NEW SERVICE WITH ALABAMA POWER COMPANY PRIOR TO BEGINNING ANY WORK.
5. APPROXIMATE NEW LOCATION OF NEW 120/240 VOLT 60A SERVICE PEDESTAL. COORDINATE FINAL LOCATION WITH RETENTION POND AND ADJUST AS REQUIRED.
6. THE ELECTRICAL CONTRACTOR SHALL PROVIDE AN INSTALL (2) 5" CONDUITS (A MINIMUM OF 36" BELOW FINISHED GRADE) FROM THE UTILITY POLE TO THE NEW SERVICE PEDESTAL. NOTE THAT THE PEDESTAL IS ON A HIGHER GRADE LEVEL THAN THE UTILITY POLE - THE CONDUITS SHALL BE INSTALLED 36" BELOW THE LOWEST GRADE LEVEL. COORDINATE ALL ASPECTS OF THE NEW SERVICE WITH ALABAMA POWER COMPANY PRIOR TO BEGINNING ANY WORK.

WAS DESIGN landscape architects
landscape architecture
land planning
placemaking
Foley, Alabama
P. 251.948.7181
Mobile, Alabama
P. 251.344.4023
Jackson, Mississippi
P. 601.790.0781
Pensacola, Florida
P. 850.203.4252
www.was-design.com

A Landscape Development Plan for
Lavretta Park Pickleball Courts
PR-073-22 Mobile, Alabama

Revisions

No.	Date	Revisions / Submissions
	08.30.23	95% CONSTRUCTION DRAWINGS
	09.29.23	100% CONSTRUCTION DRAWINGS

© Copyright 2022 WAS Design Inc. These documents and their contents are the property of WAS Design. Any reproductions, revisions, modifications or use of these documents without the express written consent of WAS Design is prohibited by law.

CM
Drawn:
Project Manager:
Principal:
Project No.
September 29, 2023
Date:

Registration:
ALABAMA LICENSED No. 50660 PROFESSIONAL ENGINEER CHRISTINA MARIE DELL
09/29/2023
Drawings not valid without seal

Sheet Title:

ELECTRICAL SITE PLAN - NEW WORK

Sheet No.
E300

SHEET NOTES

1. APPROXIMATE NEW LOCATION OF NEW 120/240 VOLT 60A SERVICE PEDESTAL.
2. THE ELECTRICAL CONTRACTOR SHALL PROVIDE AND INSTALL A NEW HANDHOLE AT THIS APPROXIMATE LOCATION. SEE DETAIL FOR MORE INFORMATION.
3. NEW MUSCO LIGHTING CONTROLLER.
4. THE MUSCO SYSTEM (INCLUDING CONTROLLER, FIXTURES, POLES, AND ALL ASSOCIATED HARDWARE) IS TO BE FURNISHED AND INSTALLED BY THE ELECTRICAL CONTRACTOR AS AN ADDITIVE ALTERNATE. THE SYSTEM IS TO BE INSTALLED PER MUSCO'S SPECIFICATIONS AND DIRECTION.

GENERAL NOTE(S)

1. A NEW FULLY OPERATIONAL MUSCO SYSTEM (INCLUDING CONTROLLER, PROGRAMMING, FIXTURES, POLES, ALL ASSOCIATED CONDUCTORS AND HARDWARE, ETC.) IS TO BE FURNISHED AND INSTALLED BY THE ELECTRICAL CONTRACTOR PER MUSCO'S SPECIFICATIONS AND DIRECTION AS AN ADDITIVE ALTERNATE. THE HANDHOLES AND RACEWAYS ARE TO BE INCLUDED IN THE BASE BID.
2. ALL NEW EXPOSED CONDUIT SHALL BE GRS.
3. NEW CONDUITS INSTALLED ARE TO BE INSTALLED TO AVOID CONFLICT WITH EXISTING TREE ROOT SYSTEMS AS WELL AS EXISTING UTILITIES.

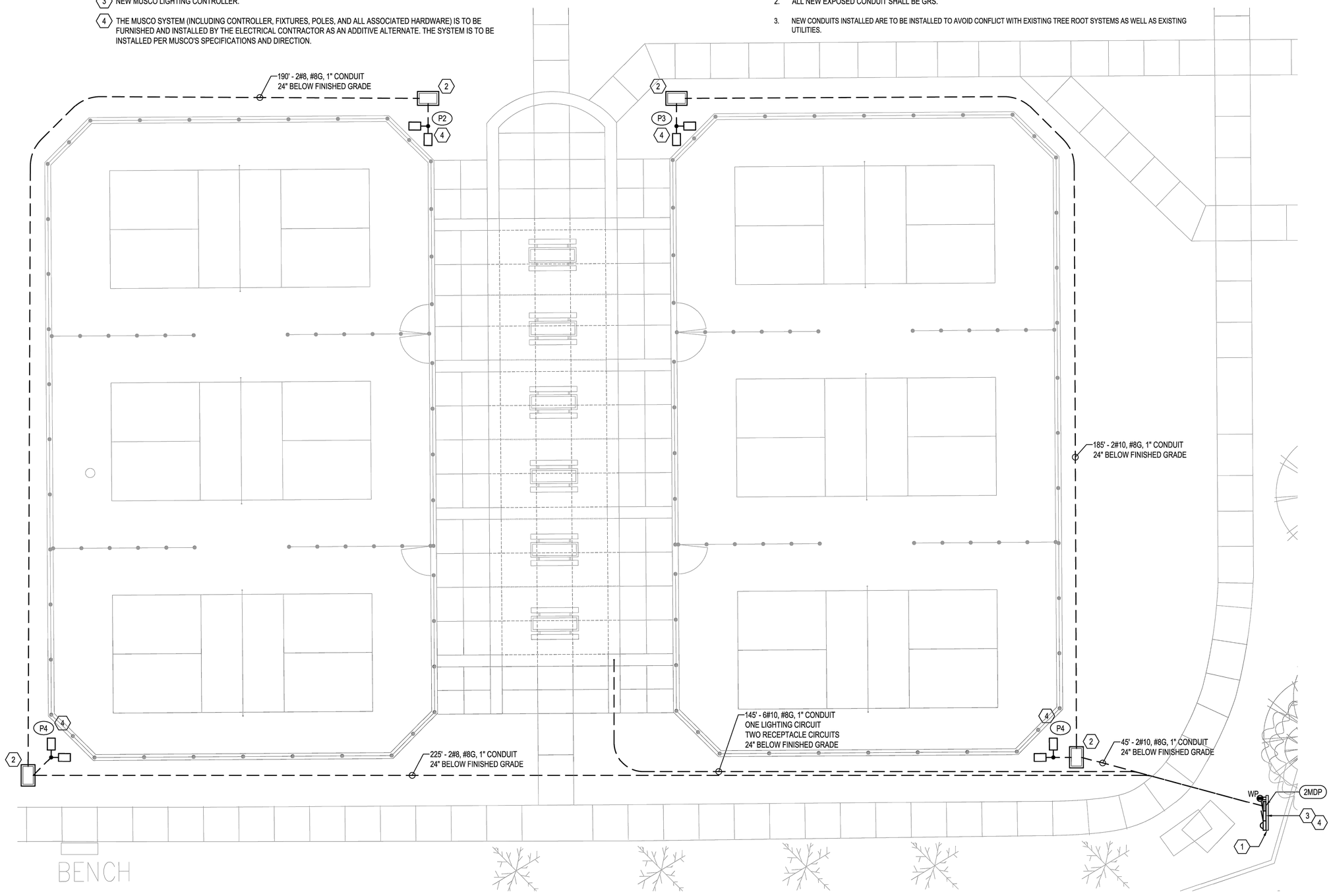

N

1 PICKLEBALL COURT LIGHTING - NEW WORK

8' 0' 8' 16'

SCALE: 1/8"=1'-0"

dell consulting
MEP Engineering
Christina Marie 50660
Alabama Certificate Number CA-4146-E
813 Downtowner Blvd. Ste. D
Mobile, Alabama 36609
P: 251-316-0015 F: 850-332-6629
DELL CONSULTING PROJECT: 23-053

was DESIGN landscape architects
landscape architecture
land planning
placemaking
Foley, Alabama
P. 251.948.7181
Mobile, Alabama
P. 251.344.4023
Jackson, Mississippi
P. 601.790.0781
Pensacola, Florida
P. 850.203.4252
www.was-design.com

A Landscape Development Plan for
Lavretta Park Pickleball Courts
PR-073-22 Mobile, Alabama

Revisions

No.	Date	Revisions / Submissions
	08.30.23	95% CONSTRUCTION DRAWINGS
	09.29.23	100% CONSTRUCTION DRAWINGS

© Copyright 2022 WAS Design Inc. These documents and their contents are the property of WAS Design. Any reproductions, revisions, modifications or use of these documents without the express written consent of WAS Design is prohibited by law.

CM
Drawn

Project Manager

Principal

Project No.

September 29, 2023
Date

Registration

ALABAMA LICENSED No. 50660 PROFESSIONAL ENGINEER CHRISTINA MARIE DELL

09/29/2023

Drawings not valid without seal

Sheet Title

ENLARGED PICKLEBALL COURT LIGHTING - NEW WORK

Sheet No.

E400

SHEET NOTES

1. APPROXIMATE NEW LOCATION OF NEW 120/240 VOLT 60A SERVICE PEDESTAL.
2. THE CONTRACTOR SHALL MOUNT THE FIXTURE IN THE STRUCTURE AT A HEIGHT TO PROVIDE APPROPRIATE LIGHTING DISTRIBUTION AND TO MINIMIZE VANDALISM. CONTRACTOR SHALL PROVIDE AND INSTALL ADDITIONAL MOUNTING HARDWARE TO SECURE THE FIXTURE AGAINST POTENTIAL VANDALISM.
3. NEW MUSCO LIGHTING CONTROLLER.
4. CIRCUITS SERVING THE PAVILION LIGHTING AND RECEPTACLES SHALL BE CONCEALED IN THE STRUCTURE. THE ELECTRICAL CONTRACTOR SHALL COORDINATE WITH THE PAVILION INSTALLER TO CONCEAL THE CIRCUITS UNDERGROUND AND UP THROUGH THE COLUMNS TO THE LIGHTS AND RECEPTACLES.

GENERAL NOTE(S)

1. ALL NEW EXPOSED CONDUIT SHALL BE GRS.
2. NEW CONDUITS INSTALLED ARE TO BE INSTALLED TO AVOID CONFLICT WITH EXISTING TREE ROOT SYSTEMS AS WELL AS EXISTING UTILITIES.

dell consulting
MEP Engineering
Christina Marie 50660
Alabama Certificate Number CA-4146-E
813 Downtowner Blvd. Ste. D
Mobile, Alabama 36609
P: 251-316-0015 F: 850-332-6629
DELL CONSULTING PROJECT: 23-053

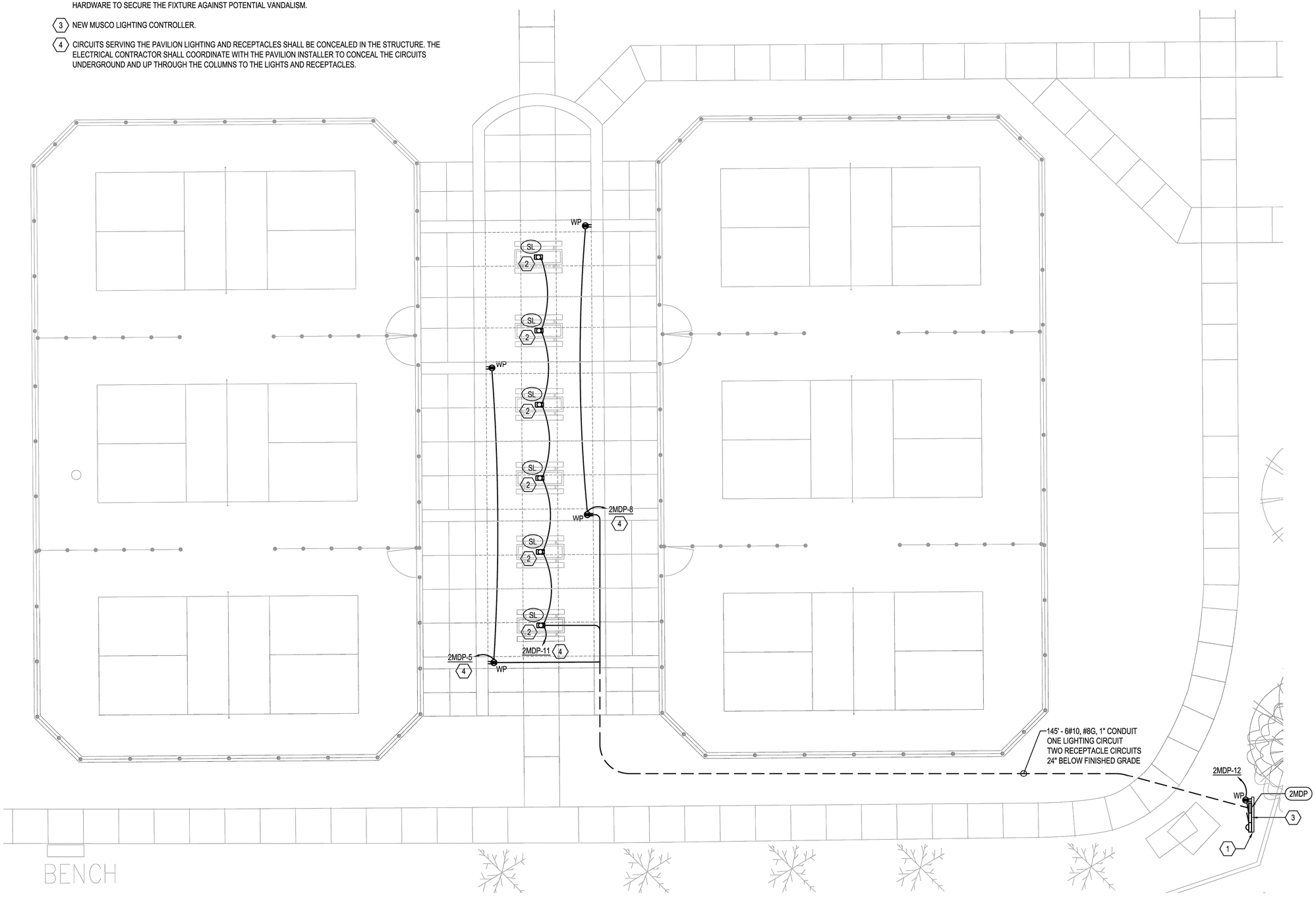

N

1 PAVILION LIGHTING / POWER - NEW WORK

8' 0' 8' 16'

SCALE: 1/8"=1'-0"

WAS DESIGN landscape architects
landscape architecture
land planning
placemaking
Foley, Alabama
P: 251.948.7181
Mobile, Alabama
P: 251.344.4023
Jackson, Mississippi
P: 601.790.0781
Pensacola, Florida
P: 850.203.4252
www.was-design.com

A Landscape Development Plan for
Lavretta Park Pickleball Courts
PR-073-22 Mobile, Alabama

Revisions

No.	Date	Revisions / Submissions
	08.30.23	95% CONSTRUCTION DRAWINGS
	09.29.23	100% CONSTRUCTION DRAWINGS

© Copyright 2022 WAS Design Inc. These documents and their contents are the property of WAS Design. Any reproductions, revisions, modifications or use of these documents without the express written consent of WAS Design is prohibited by law.

Drawn: CM
Project Manager:
Principal:
Project No.:
Date: September 29, 2023

Registration: ALABAMA LICENSED No. 50660 PROFESSIONAL ENGINEER CHRISTINA MARIE DELL 09/29/2023
Drawings not valid without seal

Sheet Title:

ENLARGED PAVILION LIGHTED - POWER - NEW WORK

Sheet No.

E500

SHEET NOTES

1. THE ELECTRICAL CONTRACTOR SHALL PROVIDE AND INSTALL A NEW HANDHOLE AT THIS APPROXIMATE LOCATION. SEE DETAIL FOR MORE INFORMATION.
2. TO SOUTH PARKING LOT LIGHTING CIRCUIT.

GENERAL NOTE(S)

1. ALL NEW EXPOSED CONDUIT SHALL BE GRS.
2. NEW CONDUITS INSTALLED ARE TO BE INSTALLED TO AVOID CONFLICT WITH EXISTING TREE ROOT SYSTEMS AS WELL AS EXISTING UTILITIES.

dell consulting
MEP Engineering
Christina Marie 50660
Alabama Certificate Number CA-4146-E
813 Downtowner Blvd. Ste. D
Mobile, Alabama 36609
P: 251-316-0015 F: 850-332-6629
DELL CONSULTING PROJECT: 23-053

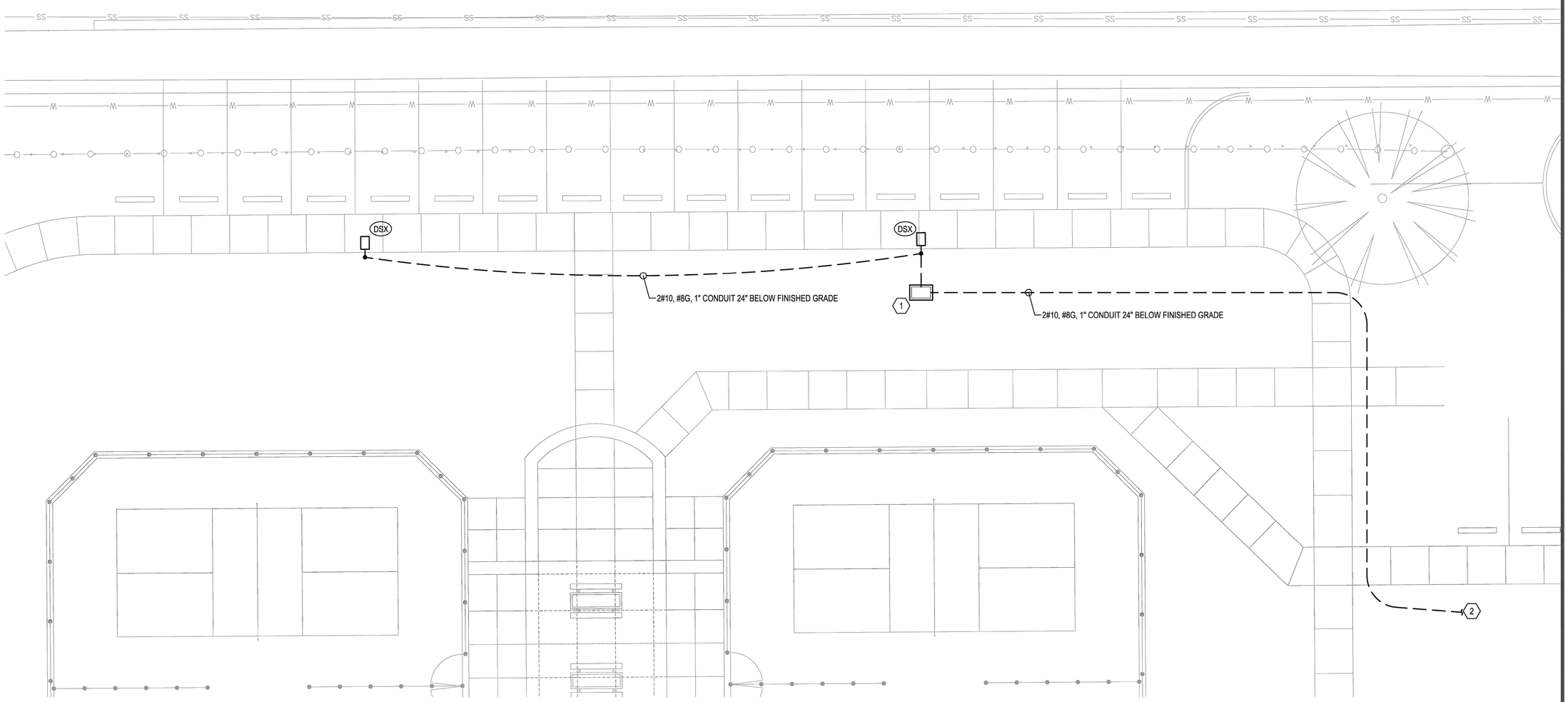

N

1 NORTH PARKING LOT LIGHTING - NEW WORK

8' 0' 8' 16'

SCALE: 1/8"=1'-0"

was DESIGN landscape architects
landscape architecture
land planning
placemaking
Foley, Alabama
P. 251.948.7181
Mobile, Alabama
P. 251.344.4023
Jackson, Mississippi
P. 601.790.0781
Pensacola, Florida
P. 850.203.4252
www.was-design.com

A Landscape Development Plan for
Lavretta Park Pickleball Courts
PR-073-22 Mobile, Alabama

Revisions

No.	Date	Revisions / Submissions
	08.30.23	95% CONSTRUCTION DRAWINGS
	09.29.23	100% CONSTRUCTION DRAWINGS

© Copyright 2022 WAS Design Inc. These documents and their contents are the property of WAS Design. Any reproductions, revisions, modifications or use of these documents without the express written consent of WAS Design is prohibited by law.

CM
Drawn:
Project Manager:
Principal:
Project No.
September 29, 2023
Date:

Registration:
ALABAMA LICENSED No. 50660 PROFESSIONAL ENGINEER CHRISTINA MARIE DELL
09/29/2023
Drawings not valid without seal

Sheet Title

NORTH PARKING LOT LIGHTING - NEW WORK

Sheet No.
E600

SHEET NOTES

1. THE ELECTRICAL CONTRACTOR SHALL PROVIDE AND INSTALL A NEW HANDHOLE AT THIS APPROXIMATE LOCATION. SEE DETAIL FOR MORE INFORMATION.
2. TO SERVICE PANEL "2MDP" - SEE SITE PLAN FOR FURTHER ROUTING.
3. TO NORTH PARKING LOT LIGHTING CIRCUIT.

GENERAL NOTE(S)

1. ALL NEW EXPOSED CONDUIT SHALL BE GRS.
2. NEW CONDUITS INSTALLED ARE TO BE INSTALLED TO AVOID CONFLICT WITH EXISTING TREE ROOT SYSTEMS AS WELL AS EXISTING UTILITIES.

dell consulting
MEP Engineering
Christina Marie 50660
Alabama Certificate Number CA-4146-E
813 Downtowner Blvd. Ste. D
Mobile, Alabama 36609
P: 251-316-0015 F: 850-332-6629
DELL CONSULTING PROJECT: 23-053

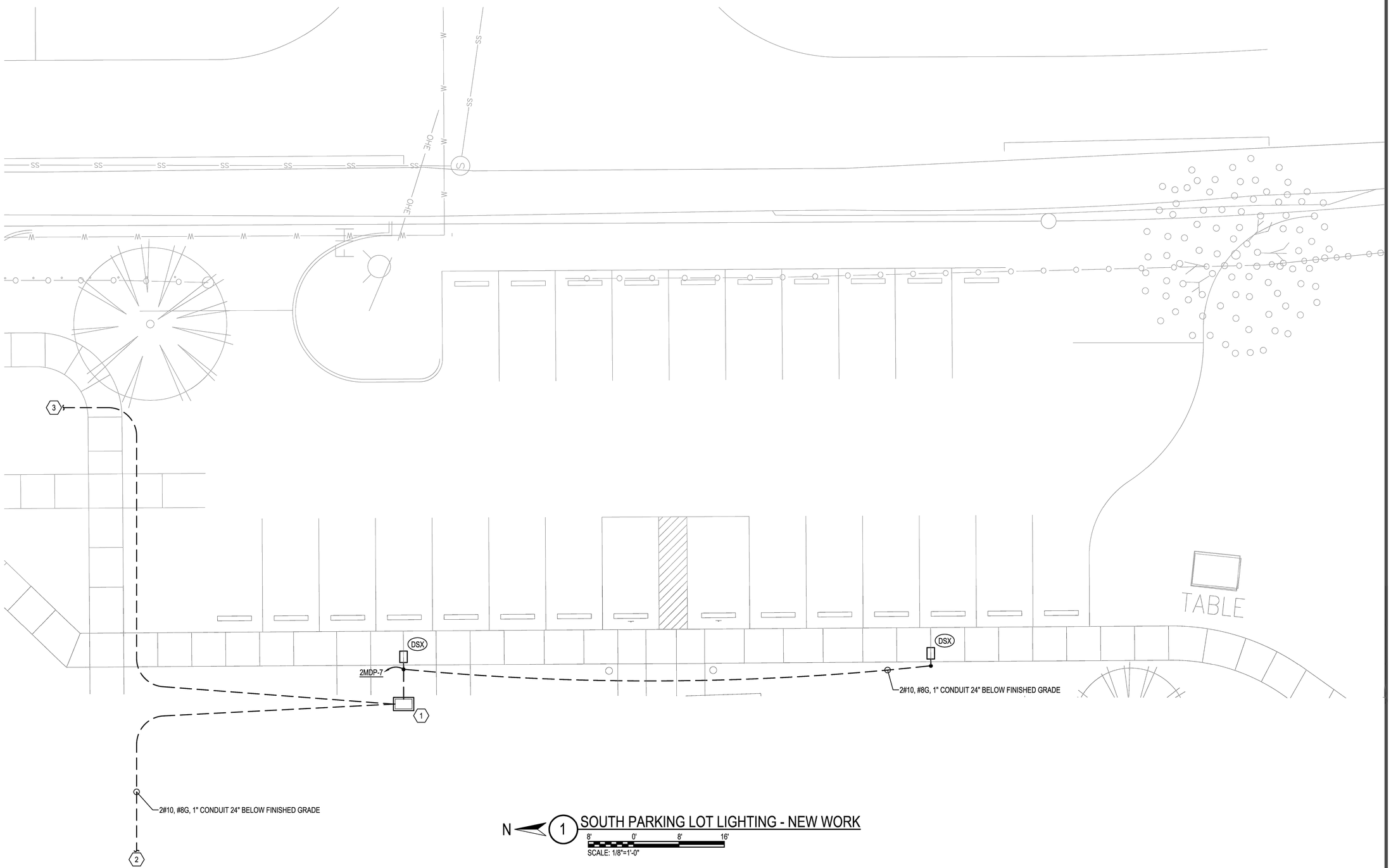

1 SOUTH PARKING LOT LIGHTING - NEW WORK

was DESIGN landscape architects
landscape architecture
land planning
placemaking
Foley, Alabama
P. 251.948.7181
Mobile, Alabama
P. 251.344.4023
Jackson, Mississippi
P. 601.790.0781
Pensacola, Florida
P. 850.203.4252
www.was-design.com

A Landscape Development Plan for
Lavretta Park Pickleball Courts
PR-073-22 Mobile, Alabama

Revisions

No.	Date	Revisions / Submissions
	08.30.23	95% CONSTRUCTION DRAWINGS
	09.29.23	100% CONSTRUCTION DRAWINGS

© Copyright 2022 WAS Design Inc. These documents and their contents are the property of WAS Design. Any reproductions, revisions, modifications or use of these documents without the express written consent of WAS Design is prohibited by law.

CM
Drawn:
Project Manager:
Principal:
Project No.:
September 29, 2023
Date:

Registration:
ALABAMA LICENSED No. 50660 PROFESSIONAL ENGINEER CHRISTINA MARIE DELL
09/29/2023
Drawings not valid without seal

Sheet Title:

SOUTH PARKING LOT LIGHTING - NEW WORK

Sheet No.
E700

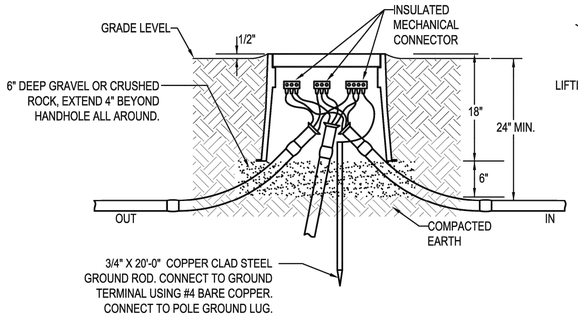

INSTALLATION DETAIL

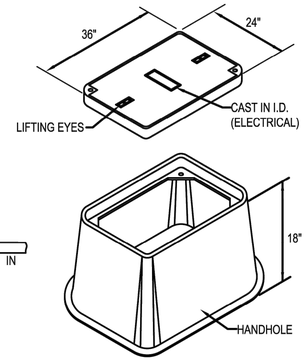

CONSTRUCTION DETAIL

HANDHOLE AS QUAZITE PG2436HH0017 BOX COMPLETE WITH PG2436HA0017 COVER. COVER SHALL BE TRAFFIC RATED FOR 22,500 LBS.

HANDHOLE NOTES:

1. HANDHOLE SHALL HAVE LOGO CAST IN COVER (LOGO=ELECTRICAL). INSTALL IN ACCORDANCE WITH THE MANUFACTURER'S PRINTED INSTRUCTIONS AND THESE REQUIREMENTS.
2. TERMINATE CONDUITS ENTERING HANDHOLE WITH END BELL. CONSTRUCT CONDUIT RISE TO ENTER BOX FROM SIDE WITH 22-1/2° SWEEP ELBOWS.
3. CONDUITS ENTERING AND LEAVING HANDHOLE SHALL BE SEALED IN ACCORDANCE WITH THE NATIONAL ELECTRICAL CODE ARTICLES 514 AND 501.15.

1 ELECTRICAL HANDHOLE DETAIL

NOT TO SCALE

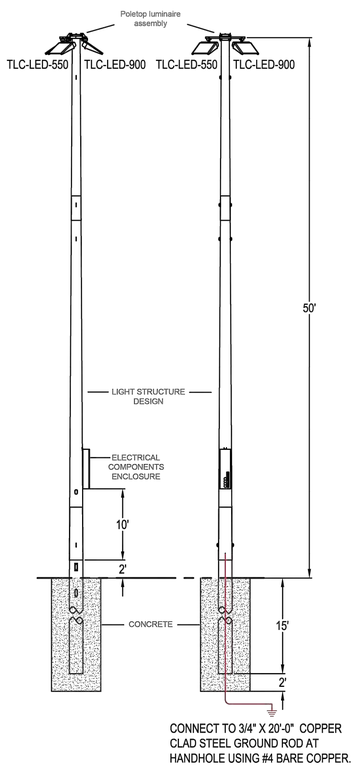

EMBEDMENT CHART

THE FOLLOWING ARE INITIAL EMBEDMENT DEPTHS THAT HAVE BEEN CONFIRMED BY A MUSCO STRUCTURAL ENGINEER:

POLE C#	EMBEDMENT	DRILLED HOLE DIAMETER	MOUNTING HEIGHT
	15'-0"	36"	50'

DRILL PAST THE EMBEDMENT DEPTH 2'-0" AND ADD 2' OF FILL MATERIAL AND COMPACT. SUSPEND AS THE BACKFILL WITH CONCRETE IS COMPLETE.

2 POLE DETAIL (ALTERNATE BID)

NOT TO SCALE

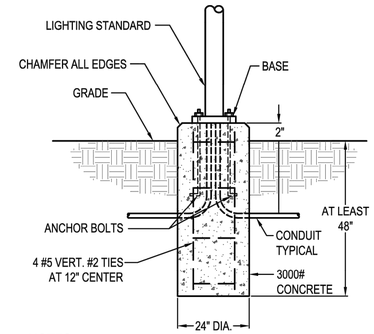

NOTES:

1. INSTALL A 5/8" BY 10'-0" COPPERCLAD STEEL GROUND ROD DRIVEN BESIDE EACH BASE AND PROVIDE A #6 COPPER BOND FROM GROUND ROD TO BASE OF POLE. PROVIDE ALL NECESSARY LUGS OR TERMINALS TO CONNECT TO POLE.
2. BASE TO BE POURED AGAINST UNDISTURBED EARTH. DO NOT PLACE ANY PORTION OF BASE BELOW WATER TABLE.
3. SEE PLANS FOR LOCATION AND QUANTITIES.

3 CONCRETE BASE FOR SITE LIGHTING POLE DETAIL

NOT TO SCALE

dell consulting
MEP Engineering
Christina Marie 50660
Alabama Certificate Number CA-4146-E
813 Downtowner Blvd. Ste. D
Mobile, Alabama 36609
P: 251-316-0015 F: 850-332-6629
DELL CONSULTING PROJECT: 23-053

was DESIGN landscape architects
landscape architecture
land planning
placemaking
Foley, Alabama P. 251.948.7181
Mobile, Alabama P. 251.344.4023
Jackson, Mississippi P. 601.790.0781
Pensacola, Florida P. 850.203.4252
www.was-design.com

A Landscape Development Plan for
Lavretta Park Pickleball Courts
PR-073-22 Mobile, Alabama

Revisions

No.	Date	Revisions / Submissions
	08.30.23	95% CONSTRUCTION DRAWINGS
	09.29.23	100% CONSTRUCTION DRAWINGS

© Copyright 2022 WAS Design Inc. These documents and their contents are the property of WAS Design. Any reproductions, revisions, modifications or use of these documents without the express written consent of WAS Design is prohibited by law.

CM
Drawn
Project Manager
Principal
Project No.
September 29, 2023
Date

Registration
ALABAMA LICENSED No. 50660 PROFESSIONAL ENGINEER CHRISTINA MARIE DELL
09/29/2023
Drawings not valid without seal

Sheet Title

ELECTRICAL DETAILS

Sheet No.
E800

PANELBOARD INFORMATION SCHEDULE

MARK	ENCLOSURE TYPE	MOUNTING STYLE	VOLTAGE	Ø	WIRE	MAIN BKR	IF MLO, SERVING BKR	SERVICE RATED	kAIC RATING	Ø BUS RATING (A)	N BUS RATING	FEEDER CONDUCTORS	FEEDER GROUND	FEEDER CONDUIT
2MDP	NEMA 3R	SURFACE	120/240	1	3	60	N/A	YES	10	200	100%	3#4	NONE	1 1/4"C
NOTES	ALL PANELBOARDS ARE TO HAVE ARC FLASH WARNING LABEL IN ACCORDANCE WITH THE NATIONAL ELECTRIC CODE ARTICLE 110.16													
	ALL PANELBOARDS ARE TO HAVE COPPER BUS.													

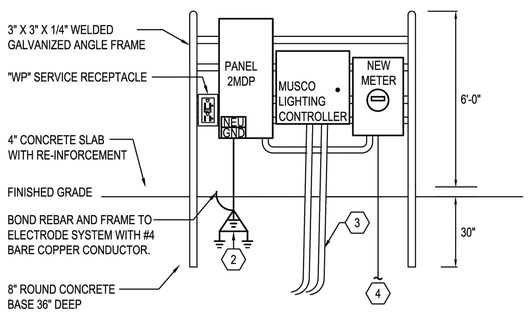

FRONT VIEW

SHEET NOTES

1. BASED ON AVAILABLE FAULT CURRENT FROM A 120/240 VOLT 1Ø 10 KVA OVERHEAD TRANSFORMER AT A DISTANCE OF 60', THE ELECTRICAL CONTRACTOR SHALL LABEL THE NEW PANEL AS "SERVICE ENTRANCE RATED" AND IN ACCORDANCE WITH THE NATIONAL ELECTRICAL CODE ARTICLE 110.24; AVAILABLE FAULT CURRENT 2,396 AMPS. FINAL PARAMETERS (DISTANCE, TRANSFORMER SIZE, ETC.) SHALL BE COORDINATED WITH ALABAMA POWER COMPANY PRIOR TO LABELING, ADJUST AS REQUIRED.
2. #4 STRANDED TINNED BARE COPPER GEC TO THREE 20' GROUND RODS ON 20' CENTERS IN EQUILATERAL DELTA ARRANGEMENT.
3. PVC CONDUIT TO NEW LIGHT POLES.
4. SEE PANELBOARD INFORMATION SCHEDULE FOR SERVICE CONDUCTOR SIZES AND INFORMATION.

1 NEW 240 VOLT SERVICE PEDESTAL SINGLE LINE RISER DIAGRAM

NOT TO SCALE

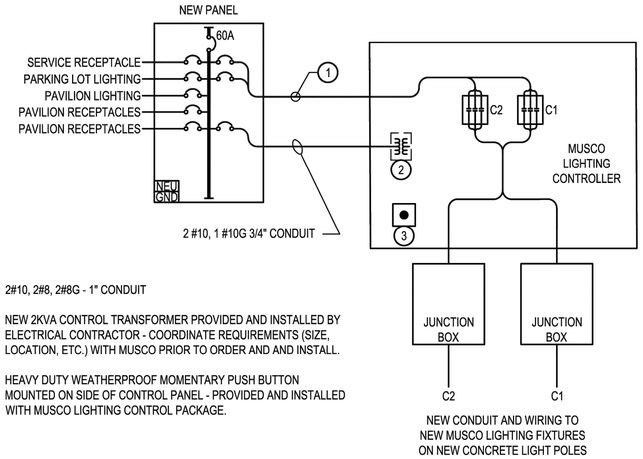

1. 2#10, 2#8, 2#8G - 1" CONDUIT
2. NEW 2KVA CONTROL TRANSFORMER PROVIDED AND INSTALLED BY ELECTRICAL CONTRACTOR - COORDINATE REQUIREMENTS (SIZE, LOCATION, ETC.) WITH MUSCO PRIOR TO ORDER AND AND INSTALL.
3. HEAVY DUTY WEATHERPROOF MOMENTARY PUSH BUTTON MOUNTED ON SIDE OF CONTROL PANEL - PROVIDED AND INSTALLED WITH MUSCO LIGHTING CONTROL PACKAGE.

2 PICKLEBALL COURTS LIGHTING POWER & CONTROL DIAGRAM

NOT TO SCALE

PANELBOARD SCHEDULE

MARK: PANEL 2MDP

CKT #	LOAD DESCRIPTION	BREAKER P	BREAKER TRIP	PHASE (kVA) A	PHASE (kVA) B	PHASE (kVA) A	PHASE (kVA) B	BREAKER TRIP	BREAKER P	LOAD DESCRIPTION	CKT #
1	PICKLEBALL COURT LIGHTING	2	20	1.4		1.4		20	2	PICKLEBALL COURT LIGHTING	2
3					1.4		1.4				4
5	PAVILION RECEPTACLES	1	20	0.2				20	1	SPARE	6
7	PARKING LOT LIGHTING	1	20		1.0		0.2	20	1	PAVILION RECEPTACLES	8
9	CONTROL TRANSFORMER	1	20	1.5				20	1	SPARE	10
11	PAVILION LIGHTING	1	20		0.3		0.2	20	1	SERVICE RECEPTACLE	12
13	SPARE	1	20					20	1	SPARE	14
15	SPARE	1	20					20	1	SPARE	16
17	SPARE	1	20					20	1	SPARE	18
19	SPARE	1	20					20	1	SPARE	20
21	SPARE	1	20					20	1	SPARE	22
23	SPARE	1	20					20	1	SPARE	24
				3.1	2.7	1.4	1.8				

TOTAL (kVA) ØA 4.5 ØB 4.5 HIGH PHASE (AMPS) 37.5

TOTAL CONNECTED LOAD (kVA) 9.0 TOTAL LOAD (AMPS) 37.5

CREATE A DIRECTORY TO INDICATE INSTALLED LOADS. INDICATE LOAD TYPE (REC, LTG, AHU-1, ETC.) AND RM NOS FOR EVERY BRANCH CIRCUIT.

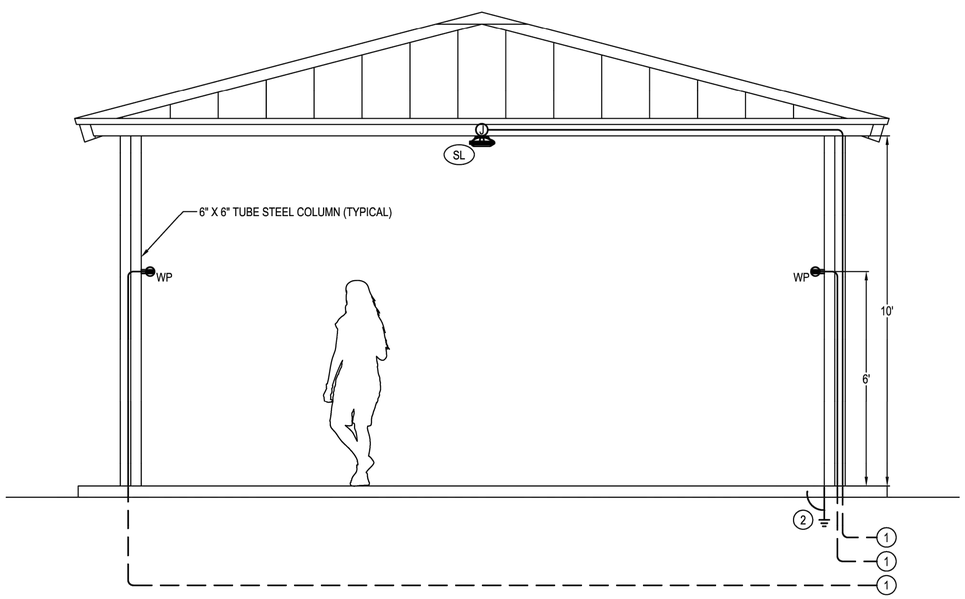

PAVILION NOTES

1. CIRCUITS SERVING THE PAVILION LIGHTING AND RECEPTACLES SHALL BE CONCEALED IN THE STRUCTURE. THE ELECTRICAL CONTRACTOR SHALL COORDINATE WITH THE PAVILION INSTALLER TO CONCEAL THE CIRCUITS UNDERGROUND AND UP THROUGH THE COLUMNS TO THE LIGHTS AND RECEPTACLES. MOUNT BOX TO PAVILION COLUMN.
2. 20' GROUND ROD WITH #4 GEC BOND TO ASSOCIATED METAL STRUCTURE. ENSURE ALL METAL PORTIONS OF THE PAVILION ARE BONDED.

3 PAVILION ELEVATION

NOT TO SCALE

LIGHTING FIXTURE SCHEDULE

MARK	MANUFACTURER AND CATALOG NUMBER	LAMPS TYPE	LAMPS WATTS	TOTAL WATTS	VOLTAGE	MOUNTING	NOTES
DSX	LITHONIA - DSX0LED-P2-40K-70CRI-TFTM-MVOLT-RPA-PIR-DDBXD POLE - SSS-20-4C-DM19AS-TP-DDBXD	LED	45	45	MVOLT	POLE 20' A.F.G.	NEW POLES TO BE RATED FOR WINDS OF 150 MPH LED POLE MOUNTED SITE LIGHTING FIXTURE WITH INTEGRAL MOTION AMBIENT SENSOR
P1	MUSCO - TLC-900 MUSCO - TLC-550 MUSCO POLE	LED	880 540	1420	240	POLE 50' A.F.G.	POLE MOUNTED LED SPORTS LIGHTING
P2	MUSCO - TLC-900 MUSCO - TLC-550 MUSCO POLE	LED	880 540	1420	240	POLE 50' A.F.G.	POLE MOUNTED LED SPORTS LIGHTING
P3	MUSCO - TLC-900 MUSCO - TLC-550 MUSCO POLE	LED	880 540	1420	240	POLE 50' A.F.G.	POLE MOUNTED LED SPORTS LIGHTING
P4	MUSCO - TLC-900 MUSCO - TLC-550 MUSCO POLE	LED	880 540	1420	240	POLE 50' A.F.G.	POLE MOUNTED LED SPORTS LIGHTING
SL	LITHONIA - DSXSCLED-20C-350-40K-T5W-MVOLT-SRM-PIR-DDBXD	LED	25	25	MVOLT	SURFACE	LED SURFACE MOUNTED SECURITY LIGHTING FIXTURE WITH INTEGRAL MOTION AMBIENT SENSOR
NOTES	FIXTURES WITH HALF FILLED IN CENTER SHALL BE PROVIDED WITH AN EMERGENCY BALLAST, 1100 LUMENS OR THE MAXIMUM AVAILABLE FOR THE FIXTURE.						
	THE ELECTRICAL CONTRACTOR SHALL PROVIDE AND INSTALL ALL MOUNTING HARDWARE AS REQUIRED FOR A COMPLETE INSTALLATION						

dell consulting
MEP Engineering
Christina Marie 50660
Alabama Certificate Number CA-4146-E
813 Downtowner Blvd. Ste. D
Mobile, Alabama 36609
P: 251-316-0015 F: 850-332-6629
DELL CONSULTING PROJECT: 23-053

was DESIGN landscape architects
landscape architecture
land planning
placemaking
Foley, Alabama P. 251.948.7181
Mobile, Alabama P. 251.344.4023
Jackson, Mississippi P. 601.790.0781
Pensacola, Florida P. 850.203.4252
www.was-design.com

A Landscape Development Plan for
Lavretta Park Pickleball Courts
PR-073-22 Mobile, Alabama

Revisions

No.	Date	Revisions / Submissions
	08.30.23	95% CONSTRUCTION DRAWINGS
	09.29.23	100% CONSTRUCTION DRAWINGS

© Copyright 2022 WAS Design Inc. These documents and their contents are the property of WAS Design. Any reproductions, revisions, modifications or use of these documents without the express written consent of WAS Design is prohibited by law.

CM
Drawn

Project Manager

Principal

Project No.

September 29, 2023
Date

Registration
ALABAMA LICENSED No. 50660 PROFESSIONAL ENGINEER CHRISTINA MARIE DELL
09/29/2023
Drawings not valid without seal

Sheet Title

ELECTRICAL DETAILS

Sheet No.

E900

A Landscape Development Plan for

Hillsdale Park Pickleball Courts

PR-073-22 Mobile, Alabama

Prepared for

Mobile, Alabama

Mobile, Alabama

Prepared by

WAS DESIGN landscape architects

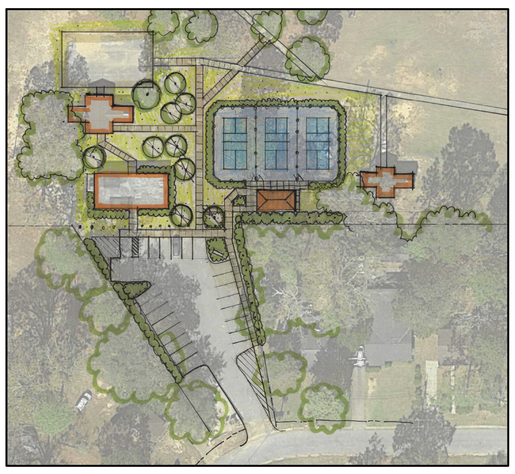

PROJECT SUMMARY

THE PROJECT DESCRIBED ON THIS DRAWING IS A LANDSCAPE DEVELOPMENT PROJECT THAT COVERS WORK DESCRIBED AS:

- DEMOLISH VEHICULAR AND PEDESTRIAN PAVING.
- SITE: PICKLEBALL COURTS; PAVILION; PARKING; PEDESTRIAN PAVING; FURNITURE: BENCHES; DRINKING FOUNTAIN; TRASH RECEPTACLE.
- UTILITIES: STORMWATER/DRAINAGE; SITE ELECTICAL/LIGHTING; WATER (DRINKING FOUNTAIN).
- GRADING: ADA ACCESSIBLE AMENITIES AND CIRCULATION; STORMWATER/DRAINAGE.

WORK WILL BE COMPETITIVELY BID WITH THE OWNER DETERMINING THE WINNING SUBCONTRACTOR AT THEIR SOLE DISCRETION. THE CONTRACT AMOUNT SHALL BE BASED UPON A STIPULATED SUM THAT IS INDICATED ON THE PROJECT'S BID FORM. THE WORK AGREEMENT SHALL BE BETWEEN THE SELECTED CONTRACTOR AND THE PROJECT OWNER. THE OWNER HAS RETAINED THE SERVICES OF WAS DESIGN, INC. TO ASSIST IN CONSTRUCTION OBSERVATION AND CONTRACT ADMINISTRATION.

Sheet List Table

Sheet Number	Sheet Title
CS100	COVER SHEET
EC100	EXISTING CONDITIONS
LD100	LANDSCAPE DEMOLITION PLAN
LS100	LANDSCAPE SITE PLAN
LG100	LANDSCAPE GRADING PLAN
LH100	HARDSCAPE PLAN
LH500	HARDSACPE DETAILS
LH501	HARDSCAPE DETAILS
LH502	HARDSCAPE DETAILS
LH503	HARDSCAPE DETAILS
LH504	HARDSCAPE DETAILS
E100	ELECTRICAL LEGEND AND SPECIFICATIONS
E200	EXISTING OVERALL PLAN - ELECTRICAL
E201	ENLARGED EXISTING PLAN - ELECTRICAL
E300	NEW WORK OVERALL PLAN - ELECTRICAL
E301	ENLARGED NEW WORK PLAN - ELECTRICAL
E400	ELECTRICAL DETAILS
E401	ELECTRICAL DETAILS

SITE LOCATION

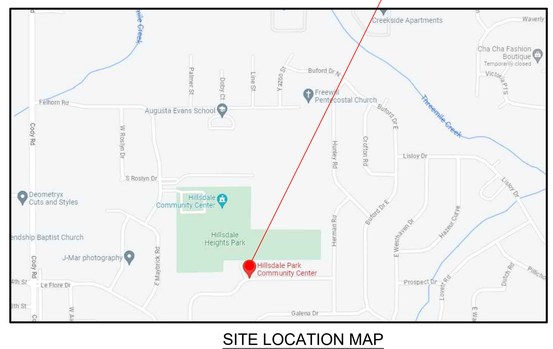

SITE LOCATION MAP

800-292-8525
#DIG (Cellular)
Dig Safely.
Alabama 1 Call

GENERAL NOTES

BASE DATA NOTES
BASE PLAN DATA IS BASED ON THE BEST AVAILABLE AND PROVIDED DATA. MINOR FIELD ADJUSTMENTS ARE EXPECTED. MAJOR FIELD ADJUSTMENTS SHOULD BE APPROVED BY THE OWNER'S REPRESENTATIVE.

CONSTRUCTION NOTES
1. CONSTRUCTION STAKE-OUT IS THE RESPONSIBILITY OF THE CONTRACTOR. ELEMENTS ARE TO BE STAKED IN THE FIELD BY THE CONTRACTOR FOR REVIEW AND APPROVAL OF THE OWNER'S REPRESENTATIVE PRIOR TO COMMENCEMENT OF CONSTRUCTION. ANY CONFLICTS IN FIELD THAT MAY ARISE, CONTRACTOR IS TO MAKE BEST JUDGEMENT DURING FIELD STAKE-OUT & COORDINATE WITH OWNER'S REPRESENTATIVE/L.A. FOR APPROVAL.
2. ALL HARDSCAPE MATERIALS & COLORS ARE TO BE APPROVED BY OWNER.
3. CONTRACTOR SHALL VERIFY THE LOCATIONS OF ALL UTILITIES PRIOR TO CONSTRUCTION. EXISTING UTILITIES TO REMAIN SHALL BE PROTECTED FROM CONSTRUCTION ACTIVITIES.
4. CONTRACTOR SHALL STAGE CONSTRUCTION ACTIVITY IN SUCH A MANNER AS TO MINIMIZE THE AREA OF DISTURBED EARTH AT THE END OF EACH WORK DAY.

DISTURBED AREAS
AREAS DISTURBED BY CONSTRUCTION ACTIVITIES SHALL RECEIVE SOD OR MULCH AS NECESSARY AND SHOULD BE RETURNED TO 'BETTER THAN WHEN THE WORK STARTED' CONDITION.

QUANTITY TAKEOFF DISCLAIMER
QUANTITIES NOTED ON PLANS ARE OFFERED AS A CONVENIENCE TO THE CONTRACTOR FOR BID PURPOSES ONLY. CONTRACTOR SHALL VERIFY ALL QUANTITIES AND REPORT ANY DISCREPANCIES TO THE LANDSCAPE ARCHITECT.

ABBREVIATION LEGEND

ALUM	ALUMINUM	LP	LOW POINT
AC	ACRES	LT	LEFT
ACCMP	ASPHALT-COATED CORRUGATED METAL PIPE	LIN	LINER
		LF	LINEAR FEET
ACP	ASBESTOS CEMENT PIPE	LC	LANDSCAPE CONTRACTOR
APPROX	APPROXIMATE(LY)	LA	LANDSCAPE ARCHITECT
B&B	BALLED AND BURLAPPED	M	METER
BC	BOTTOM OF CURB	MAX	MAXIMUM
BIT	BITUMINOUS	MH	MANHOLE
BM	BENCHMARK	MIN	MINIMUM
BLDG	BUILDING	MISC	MISCELLANEOUS
BS	BOTTOM OF SLOPE	MON	MONUMENT
BVC	BEGINNING OF VERTICAL CURVE	N	NORTH
BW	BOTH WAYS	NIC	NOT IN CONTRACT
CAL	CALIPER	NTS	NOT TO SCALE
CB	CATCH BASIN	NO	NUMBER
CI	CAST IRON	NOM	NOMINAL DIMENSION
CIR	CIRCULAR	OC	ON CENTER
CL	CENTERLINE	OD	OUTSIDE DIAMETER
CLF	CHAIN-LINK FENCE	PA	PLANTING AREA
CO	CLEANOUT	PCP	POROUS CONCRETE PIPE
CM	CENTIMETER	PVC	POLYVINYL CHLORIDE PIPE
CMP	CORRUGATED METAL PIPE	PC	POINT OF CURVATURE
COL	COLUMN	PCC	POINT OF COMPOUND CURVATURE
CONC	CONCRETE		
CONT'R	CONTRACTOR	PL	PROPERTY LINE
COR	CORNER	PVC	POINT OF VERTICAL CURVATURE
C/S	CROSS SLOPE	PVT	POINT OF VERTICAL TANGENT
C/W	CONNECTED WITH	PT	POINT OF TANGENT
CF	CUBIC FEET	R	RADIUS
CY	CUBIC YARD	RCP	REINFORCED CONCRETE PIPE
D	DEGREE OF CURVATURE	ROW	RIGHT OF WAY
DETL	DETAIL	RT	RIGHT
DMH	DROP MANHOLE	REQD	REQUIRED
DF	DRINKING FOUNTAIN	REV	REVISION
DIM	DIMENSION	REINF	REINFORCED
DIA	DIAMETER	SAN	SANITARY
DWG	DRAWING	SECT	SECTION
DEP	DEPARTURE	SH	SHEET
DIR	DIRECTED	S	SOUTH
-E-	ELECTRICAL	SI	STORM INLET
E	EAST	-ST-	STORM SEWER
EA	EACH	-SAN-	SANITARY SEWER
EC	ELECTRICAL CONTRACTOR	SPEC	SPECIFICATIONS OR SPECIFIED
EL	ELEVATION	ST'L	STEEL
EAP	EXPOSED AGGREGATE PAVING	SQ	SQUARE
EVC	END OF VERTICAL CURVE	SF	SQUARE FOOT
ENGR	ENGINEER	SY	SQUARE YARD
EX	EXISTING	STA	STATION
EXP	EXPANSION	S/S	STAINLESS STEEL
EW	END WALL	-T-	TELEPHONE
ES	END SECTION	T	TANGENT
FFE	FINISHED FLOOR ELEVATION	TC	TOP OF CURB
FG	FINISHED GRADE	TE	TAPERED END
FIN	FINISH	TCP	TERRA-COTTA PIPE
FL	FLOOR	T&G	TONGUE AND GROOVE
FH	FIRE HYDRANT	TW	TOP OF WALL
FL	FLOW LINE	TS	TOP OF SLOPE
FSD	FULL-SIZED DETAIL	TWP	TOWNSHIP
FTG	FOOTING	TYP	TYPICAL
FT	FOOT OR FEET	UD	UNDERDRAIN
GA	GAUGE	USGS	US GEOLOGICAL SURVEY
-G-	GAS	VC	VERTICAL CURVE
GAL	GALLON	VAR	VARIES, VARIABLE
GALV	GALVANIZED	VERT	VERTICAL
GC	GENERAL CONTRACTOR	VCP	VITRIFIED CLAY PIPE
GR	GUARD RAIL	-W-	WATER
GD	GRADE	W	WEST
GV	GAS VALVE	W/	WITH
HB	HOSE BIB	W/O	WITHOUT
HW	HEAD WALL	WWM	WOVEN WIRE MESH
HP	HIGH POINT	WV	WATER VALVE
HT	HEIGHT	YD	YARD DRAIN
HOR	HORIZONTAL		
HWY	HIGHWAY	ø	ROUND DIAMETER
ID	INSIDE DIAMETER	@	AT
IN	INCH	'	FEET
INL	INLET	"	INCHES
INV	INVERT	#1	NUMBER
JB	JUNCTION BOX	1#	POUND
L	LENGTH OF CURVE		
LAT	LATITUDE		

WAS DESIGN landscape architects
landscape architecture
land planning
placemaking
Foley, Alabama
P. 251.948.7181
Mobile, Alabama
P. 251.344.4023
Jackson, Mississippi
P. 601.790.0781
Pensacola, Florida
P. 850.203.4252
www.was-design.com

A Landscape Development Plan for
Hillsdale Park
Pickleball Courts
PR-073-22 Mobile, Alabama

Revisions

No.	Date	Revisions / Submissions
	08.31.23	80% CLIENT REVIEW
	09.29.23	100% CONSTRUCTION DRAWINGS

© Copyright 2023 WAS Design Inc. These documents and their contents are the property of WAS Design. Any reproductions, revisions, modifications or use of these documents without the express written consent of WAS Design is prohibited by law.

CAD
Drawn
DCT
Project Manager
JEC
Principal
236010-029
Project No.
06.19.23
Date

Registration
STATE OF ALABAMA
JAMES ELLIS CROWE
REGISTERED LANDSCAPE ARCHITECT
6

Sheet Title

COVER SHEET

Sheet No.

CS100

GENERAL NOTES

NOTES;

1. THIS SURVEY IS A TOPOGRAPHICAL SURVEY OF A PORTION OF HILLSDALE PARK. LOCATED IN THE HILLSDALE SUBDIVISION OF THE CITY OF MOBILE, WEST OF THE UNIV. OF SOUTH ALABAMA.
2. HORIZONTAL COORDINATES SHOWN HEREON ARE REFERENCED TO STATE PLANE COORDINATES, ALABAMA WEST ZONE, NAD 83, U.S. SURVEY FOOT, AND WERE ESTABLISHED ON-SITE VIA RTK GPS OBSERVATION.
3. LAST DAY OF SURVEY CONCLUDED ON 2023-06-06.
4. PROPERTY LINES SHOWN ARE APPROXIMATED ONLY, BASED ON TAX RECORDS. NO BOUNDARY SURVEY WAS PERFORMED FOR TOPOGRAPHICAL SURVEY.

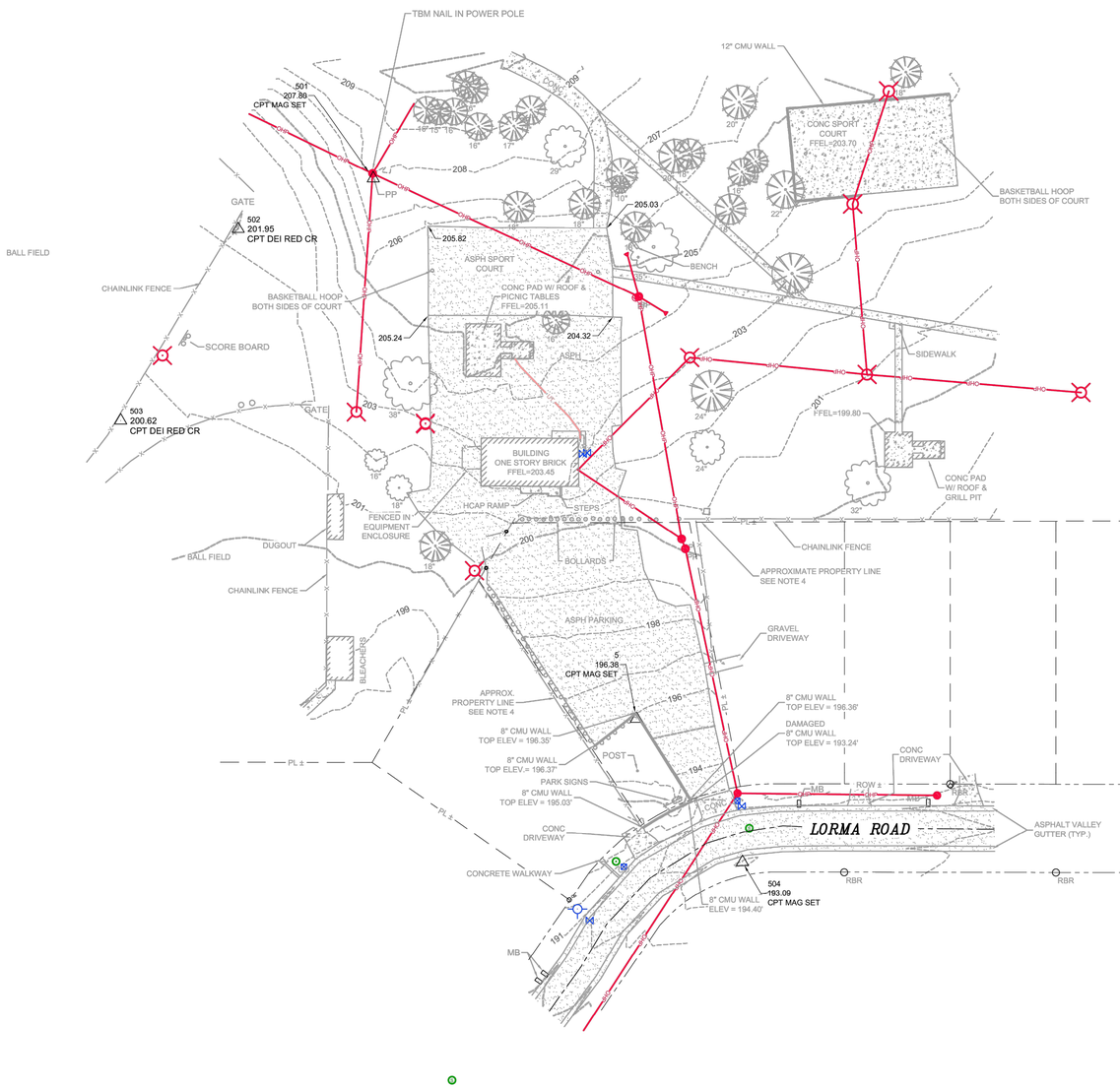

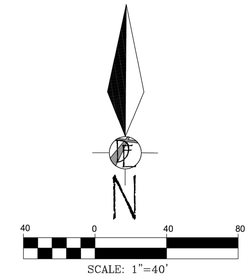

Control Point Table

Point #	Elevation	Northing	Easting	Description
5	196.38	255720.21	1748029.93	CPT MAG SET
501	207.80	256026.94	1747880.54	CPT MAG SET
502	201.95	255998.37	1747803.86	CPT DEI RED CR
503	200.62	255889.50	1747737.23	CPT DEI RED CR
504	193.09	255638.93	1748090.00	CPT MAG SET

SYMBOL LEGEND	
△	CONTROL POINT
	POWER POLE
	STREET SIGN
	FIRE HYDRANT
	GUY WIRE
	LIGHT POLE
	MAIL BOX
	SEWER MANHOLE
	WATER METER
	WATER VALVE

TREE LEGEND	
	OAK
	PINE

UNDERGROUND TELE. — UT —
APPROX. PROP. LINE
ROW
OVERHEAD POWER — OHP —
EXIST. CONCRETE
EXISTING ASPHALT
EXISTING GRAVEL

NOTES;

1. THIS SURVEY IS A TOPOGRAPHICAL SURVEY OF A PORTION OF HILLSDALE PARK. LOCATED IN THE HILLSDALE SUBDIVISION OF THE CITY OF MOBILE, WEST OF THE UNIV. OF SOUTH ALABAMA.
2. HORIZONTAL COORDINATES SHOWN HEREON ARE REFERENCED TO STATE PLANE COORDINATES, ALABAMA WEST ZONE, NAD 83, U.S. SURVEY FOOT, AND WERE ESTABLISHED ON-SITE VIA RTK GPS OBSERVATION.
3. LAST DAY OF SURVEY CONCLUDED ON 2023-06-06.
4. PROPERTY LINES SHOWN ARE APPROXIMATED ONLY, BASED ON TAX RECORDS. NO BOUNDARY SURVEY WAS PERFORMED FOR TOPOGRAPHICAL SURVEY.

PLANS NOT VALID UNLESS THEY BEAR A COLOR SIGNATURE OR AN EMBOSSED SEAL.
PLANS ARE NOT ISSUED FOR CONSTRUCTION UNLESS THE REVISION IS A NUMERAL.

WE UTILIZE SCREENING TECHNIQUES IN OUR DESIGN AND THESE SOMETIMES ARE NOT VISIBLE IF OUR DESIGN HAS BEEN COPIED OR PRINTED WITH A LOW QUALITY SETTING. YOU CAN BE SURE THAT YOU HAVE A HIGH QUALITY PRINT OR COPY IF YOU CAN SEE THE DRIVEN ENGINEERING, INC. LOGO BEHIND THE TEXT IN THIS BOX.

CLIENT:
WAS DESIGN
256 WACKER LANE N.
MOBILE, AL 36608

Driven Engineering, Inc.
8005 Morris Hill Road, Semmes, AL 36575
(251) 649-4011 Office
(251) 645-0971 Fax
www.drivenengineering.com

TITLE:
TOPOGRAPHICAL SURVEY
OF HILLSDALE PARK

~Copyright © as Dated by Driven Engineering, Inc~
All Rights Reserved

DATE	SCALE AS SHOWN	
DRAWN BY:	CHECKED BY:	APPROVED BY:

PROJECT NUMBER: 23009

DRAWING NUMBER	TOTAL SHEETS	REVISION
1		

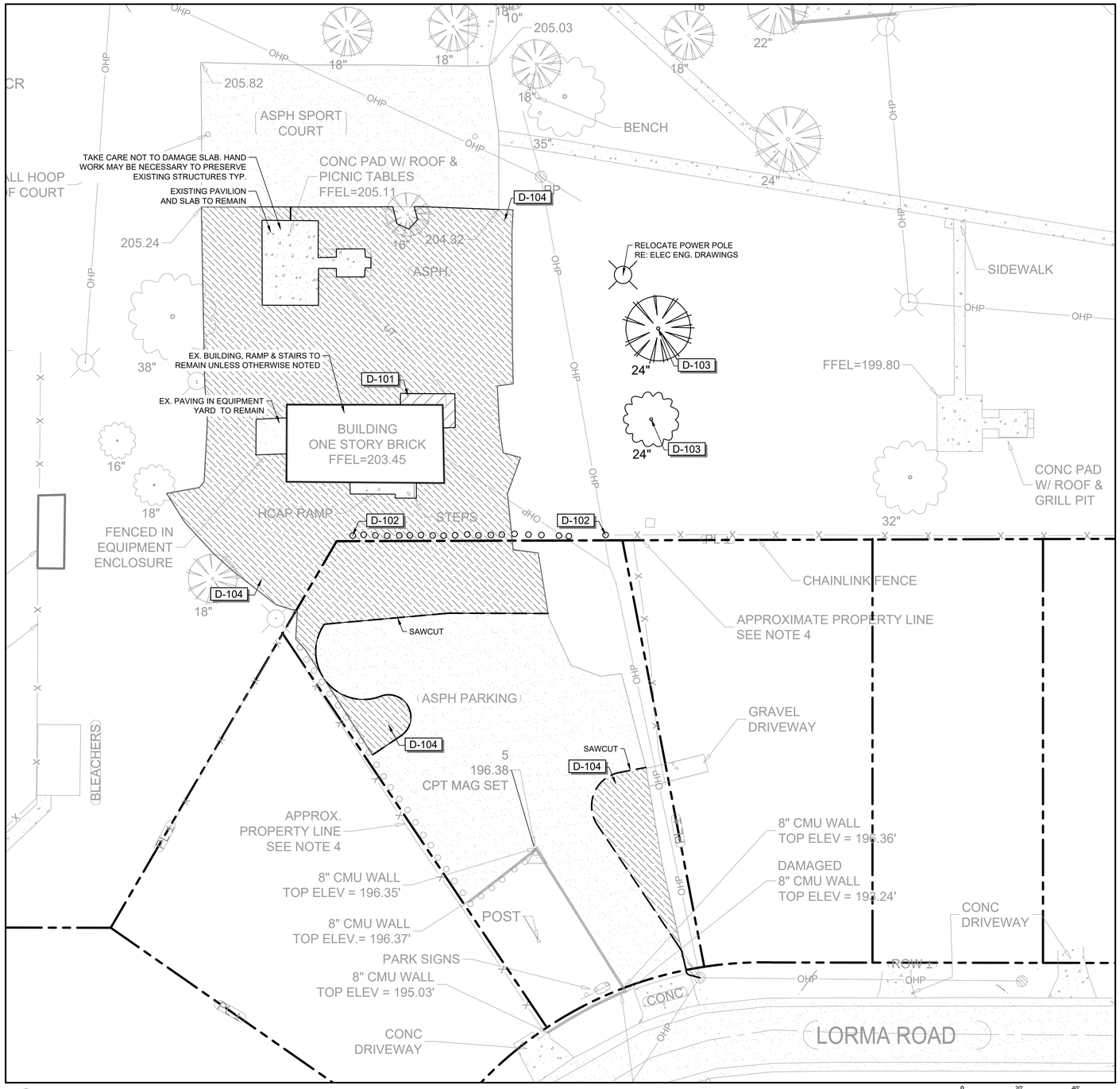

1 DEMOLITION PLAN

Scale: 1"=20'_XREF

0 20' 40'

REFERENCE NOTES SCHEDULE

SYMBOL	DEMOLITION DESCRIPTION	ESTIMATED QTY
D-101	EXISTING CONCRETE WALK: WHERE NECESSARY; EXCAVATE & REMOVE TO SUFFICIENT DEPTH TO INSTALL SUBGRADE INFRASTRUCTURE. NOTE: SOME HAND WORK MAY BE REQUIRED ADJACENT TO EXISTING BUILDINGS. DISPOSE OF WASTE APPRPORATELY.	108 SF
D-102	EXISTING WOOD BOLLARD: EXCAVATE AND REMOVE; BACKFILL ANY VOIDS WITH APPROVED BACKFILL SOIL. DISPOSE OF WASTE APPROPRIATELY.	20
D-103	EXISTING TREE: REMOVE EX. TREE & STUMP; BACKFILL WITH SANDY LOAM SOIL.	2
D-104	EXISTING ASPHALT PAVING & BASE MATERIAL: SAWCUT WHERE NECESSARY; EXCAVATE & REVMOVE TO SUFFICIENT DEPTH TO INSTALL SUBGRADE INFRASTRUCTURE. NOTE: SOME HAND WORK MAY BE REQUIRED ADJACENT TO EXISTING BUILDINGS. DISPOSE OF WASTE APPROPRIATELY.	16,002 SF

DEMOLITION NOTE

MATERIAL HAVING SALVAGE VALUE SHALL BECOME THE PROPERTY OF THE OWNER ALL OTHER MATERIAL AND DEBRIS ACCUMULATED AS A RESULT OF DEMOLITION SHALL BECOME THE PROPERTY OF THE CONTRACTOR AND SHALL BE REMOVED FROM THE PREMISES BY THE CONTRACTOR AND DISPOSED OF IN A LEGAL AND PROPER MANNER.

QUANTITY TAKEOFF DISCLAIMER:

QUANTITIES NOTED ON PLANS ARE OFFERED AS A CONVENIENCE TO THE CONTRACTOR FOR BID PURPOSES ONLY. CONTRACTOR SHALL VERIFY ALL QUANTITIES AND REPORT ANY DISCREPANCIES TO THE LANDSCAPE ARCHITECT.

WAS DESIGN landscape architects
landscape architecture
land planning
placemaking
Foley, Alabama
P. 251.948.7181
Mobile, Alabama
P. 251.344.4023
Jackson, Mississippi
P. 601.790.0781
Pensacola, Florida
P. 850.203.4252
www.was-design.com

A Landscape Development Plan for

Hillsdale Park Pickleball Courts

PR-073-22 Mobile, Alabama

Revisions

No.	Date	Revisions / Submissions
	08.31.23	80% CLIENT REVIEW
	09.29.23	100% CONSTRUCTION DRAWINGS

© Copyright 2023 WAS Design Inc. These documents and their contents are the property of WAS Design. Any reproductions, revisions, modifications or use of these documents without the express written consent of WAS Design is prohibited by law.

CAD
Drawn
DCT
Project Manager
JEC
Principal
236010-029
Project No.
06.19.23
Date

Registration

STATE OF ALABAMA
JAMES ELLIS CROWE
REGISTERED
6
LANDSCAPE ARCHITECT

Sheet Title

LANDSCAPE DEMOLITION PLAN

Sheet No.

LD100

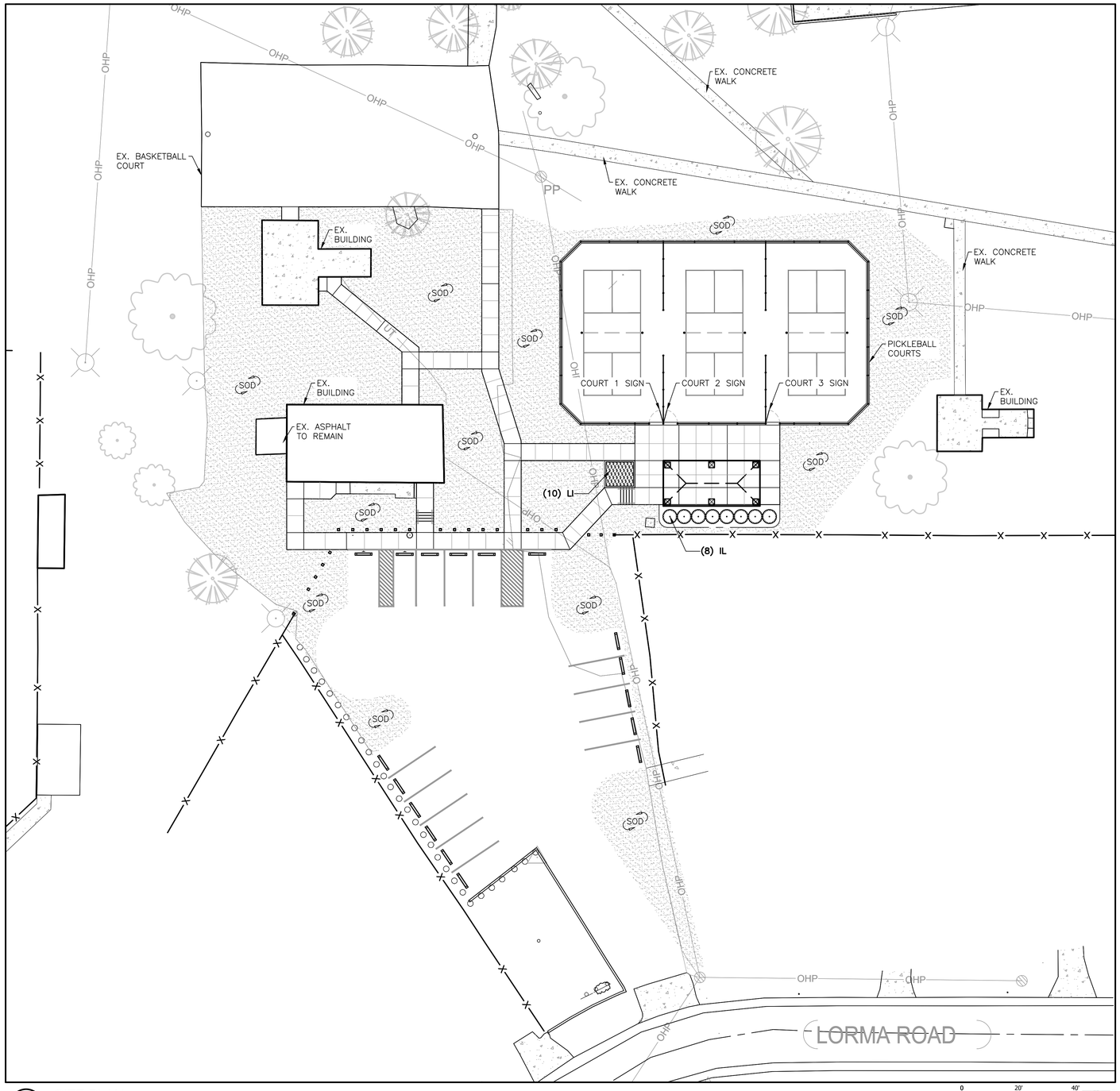

1 SITE PLAN
Scale: 1"=20'

0 20' 40'

NORTH

PLANT SCHEDULE

SHRUBS	CODE	QTY	BOTANICAL / COMMON NAME	CONT	HT	SPACING	REMARKS
	IL	8	ILEX LATIFOLIA LUSTERLEAF HOLLY	30 GAL	5`-6`	60" o.c.	FULL TO GROUND

SHRUB AREAS	CODE	QTY	BOTANICAL / COMMON NAME	CONT	HT	SPACING	REMARKS
	LI	10	LOMANDRA LONGIFOLIA 'BREEZE' BREEZE™ MAT RUSH	3 GAL		36" o.c.	FULL

SOD	CODE	ESTIMATED QTY	BOTANICAL / COMMON NAME	CONT	HT	SPACING	REMARKS
	EO	18,250 SF	EREMOCHLOA OPHIUROIDES CENTIPEDE SOD	SOD			FREE OF WEEDS

was DESIGN landscape architects
landscape architecture
land planning
placemaking
Foley, Alabama
P. 251.948.7181
Mobile, Alabama
P. 251.344.4023
Jackson, Mississippi
P. 601.790.0781
Pensacola, Florida
P. 850.203.4252
www.was-design.com

A Landscape Development Plan for
Hillsdale Park Pickleball Courts
PR-073-22 Mobile, Alabama

Revisions

No.	Date	Revisions / Submissions
	08.31.23	80% CLIENT REVIEW
	09.29.23	100% CONSTRUCTION DRAWINGS

© Copyright 2023 WAS Design Inc. These documents and their contents are the property of WAS Design. Any reproductions, revisions, modifications or use of these documents without the express written consent of WAS Desgin is prohibited by law.

CAD
Drawn
DCT
Project Manager
JEC
Principal
236010-029
Project No.
06.19.23
Date

Registration
STATE OF ALABAMA
JAMES ELLIS CROWE
Number 6
REGISTERED LANDSCAPE ARCHITECT

Sheet Title

LANDSCAPE SITE PLAN

Sheet No.
LS100

NOTE:

FOR CLARITY OF THE BASE INFORMATION THE CIVIL PROPOSED GRADING IS DISPLAYED AS EXISTING GRADE AND THE LANDSCAPE ARCHTECT GRADING IS DISPLAYED AS PROPOSED GRADE. IT IS UP TO THE CONTRACTOR TO DETERMINE THE DIFFERENCES IN TRUE EXISTING GRADE THE CIVIL PROPOSED GRADE AND THE LANDSCAPE ARCHITECTS PROPOSED GRADE. DIRECT ANY QUESTIONS AND/OR CONFLICTS TO THE LANDSCAPE ARCHITECT.

GENERAL NOTES

1. CONTRACTOR SHALL BE RESPONSIBLE FOR MIN. REQUIREMENTS OF ADA ACCESSIBILITY GUIDELINES FOR THE CONSTRUCTION OF ACCESSIBLE ROUTES INCLUDING WALKS, RAMPS & LANDING TOLERANCES, CROSS SLOPES, RUNNING SLOPES, DETECTABLE WARNINGS AND HANDRAILS.
2. THE CONTRACTOR SHALL VERIFY ALL DIMENSIONS AND GRADES ON THE GROUND AND REPORT ANY DISCREPANCIES IMMEDIATELY TO THE OWNER.
3. CONTRACTOR SHALL MAINTAIN POSITIVE DRAINAGE AWAY FROM ALL BUILDING FOUNDATIONS, AND STRUCTURES
4. CONTRACTOR SHALL ENSURE ALL AREAS ARE PROPERLY DRAINED, WITH NO SURFACE WATER PONDING OR PUDDLING
5. MAX CROSS SLOPE SHALL BE 1.5%, MAX RUNNING SLOPE SHALL BE 5%. CONTRACTOR SHALL NOTIFY L.A. OF ANY CONFLICTS PRIOR TO LAYOUT AND/OR CONSTRUCTION

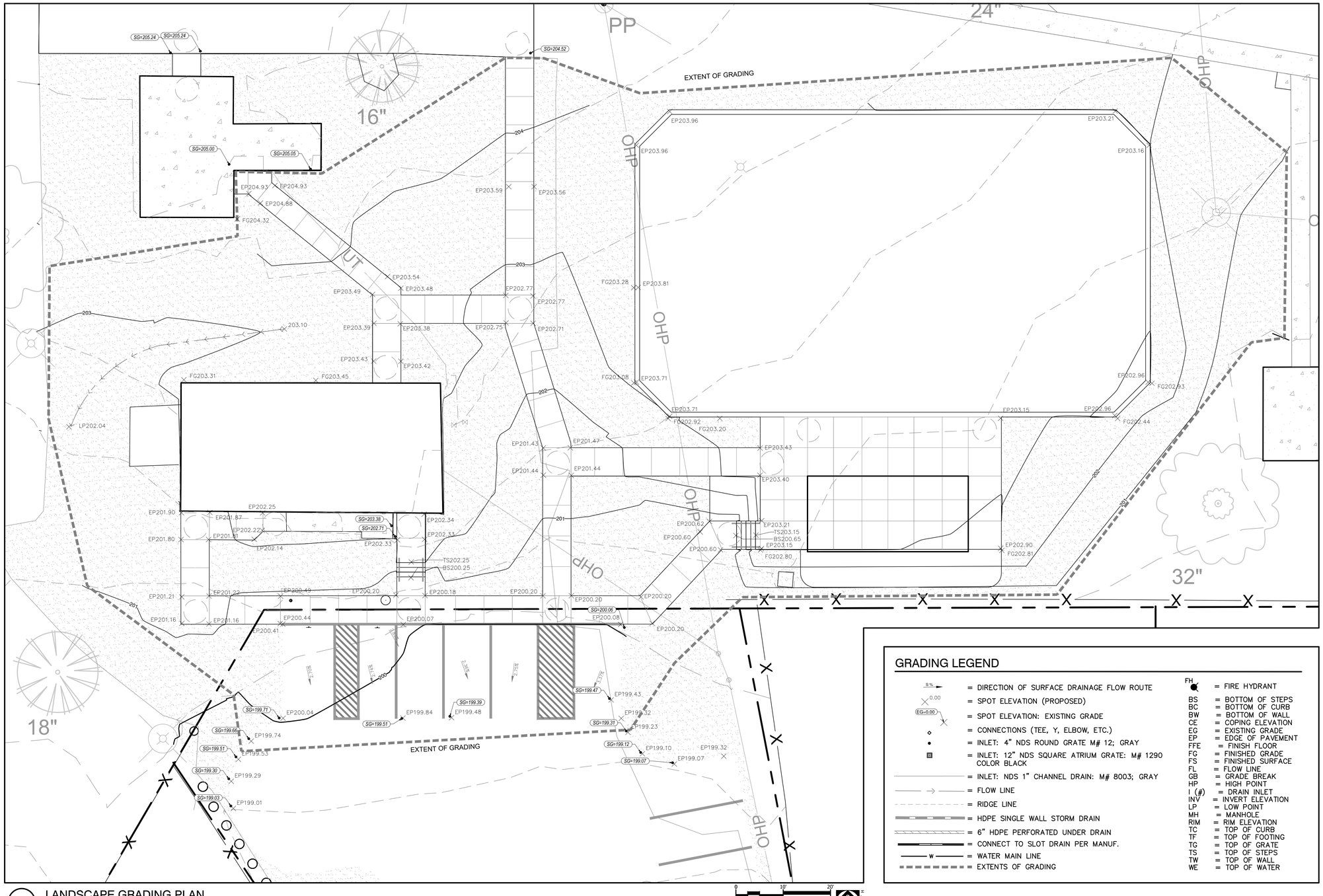

1 LANDSCAPE GRADING PLAN

Scale: 1" = 10'

GRADING LEGEND

- = DIRECTION OF SURFACE DRAINAGE FLOW ROUTE
- = SPOT ELEVATION (PROPOSED)
- = SPOT ELEVATION: EXISTING GRADE
- = CONNECTIONS (TEE, Y, ELBOW, ETC.)
- = INLET: 4" NDS ROUND GRATE M# 12; GRAY
- = INLET: 12" NDS SQUARE ATRIUM GRATE: M# 1290 COLOR BLACK
- = INLET: NDS 1" CHANNEL DRAIN: M# 8003; GRAY
- = FLOW LINE
- = RIDGE LINE
- = HDPE SINGLE WALL STORM DRAIN
- = 6" HDPE PERFORATED UNDER DRAIN
- = CONNECT TO SLOT DRAIN PER MANUF.
- = WATER MAIN LINE
- = EXTENTS OF GRADING

FH	= FIRE HYDRANT
BS	= BOTTOM OF STEPS
BC	= BOTTOM OF CURB
BW	= BOTTOM OF WALL
CE	= COPING ELEVATION
EG	= EXISTING GRADE
EP	= EDGE OF PAVEMENT
FFE	= FINISH FLOOR
FG	= FINISHED GRADE
FS	= FINISHED SURFACE
FL	= FLOW LINE
GB	= GRADE BREAK
HP	= HIGH POINT
I (#)	= DRAIN INLET
INV	= INVERT ELEVATION
LP	= LOW POINT
MH	= MANHOLE
RIM	= RIM ELEVATION
TC	= TOP OF CURB
TF	= TOP OF FOOTING
TG	= TOP OF GRATE
TS	= TOP OF STEPS
TW	= TOP OF WALL
WE	= TOP OF WATER

was DESIGN landscape architects
landscape architecture
land planning
placemaking
Foley, Alabama
P. 251.948.7181
Mobile, Alabama
P. 251.344.4023
Jackson, Mississippi
P. 601.790.0781
Pensacola, Florida
P. 850.203.4252
www.was-design.com

A Landscape Development Plan for

Hillsdale Park Pickleball Courts

PR-073-22 Mobile, Alabama

Revisions

No.	Date	Revisions / Submissions
	08.31.23	80% CLIENT REVIEW
	09.29.23	100% CONSTRUCTION DRAWINGS

© Copyright 2023 WAS Design Inc. These documents and their contents are the property of WAS Design. Any reproductions, revisions, modifications or use of these documents without the express written consent of WAS Design is prohibited by law.

CAD
Drawn
CAD
Project Manager
LCW
Principal
236010-029
Project No.
06.19.23
Date

Registration

STATE OF ALABAMA
JAMES ELLIS CROWE
6
REGISTERED LANDSCAPE ARCHITECT

Sheet Title

LANDSCAPE GRADING PLAN

Sheet No.

LG100

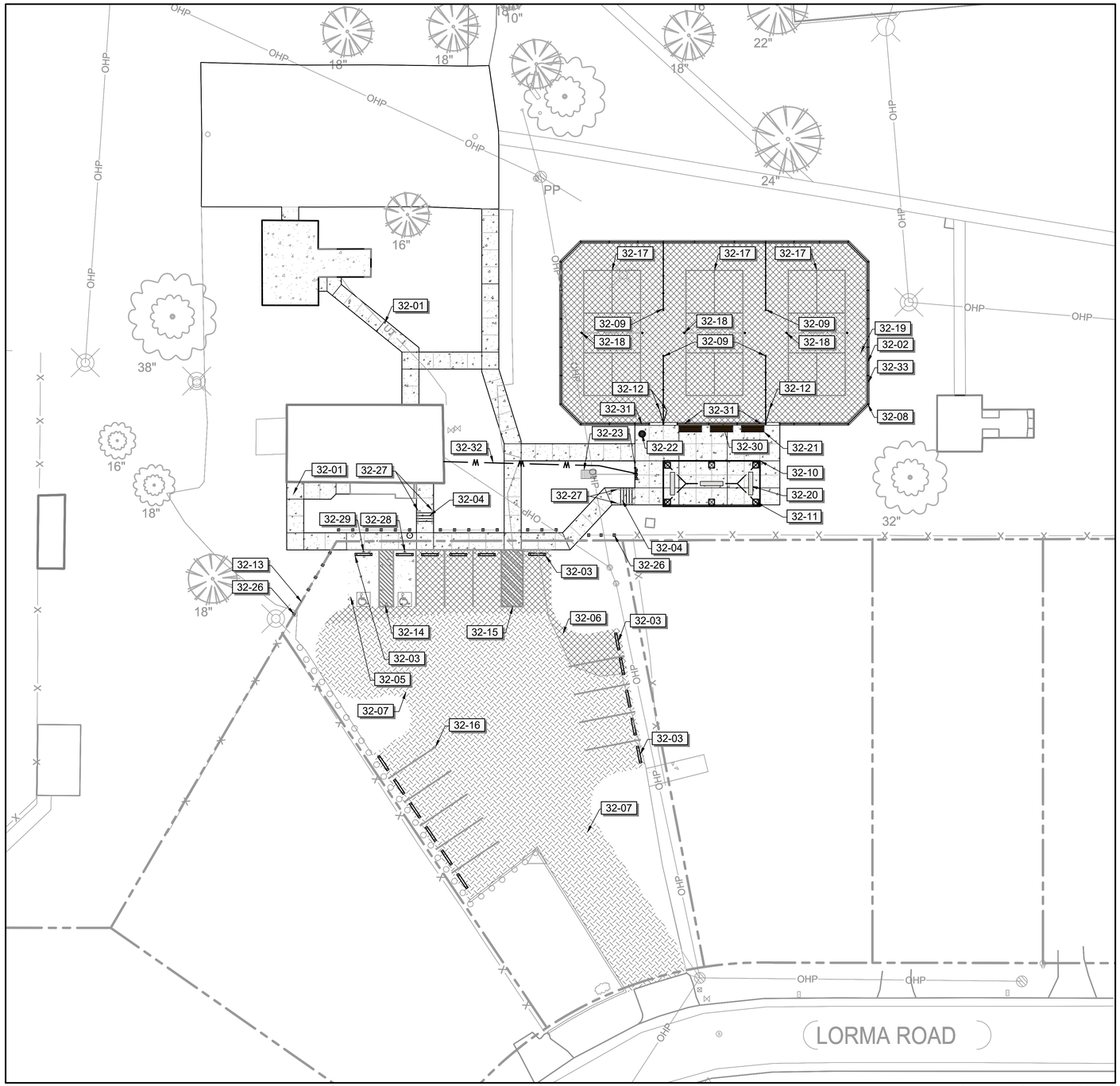

1 HARDSCAPE PLAN
Scale: 1"=20'

0 20' 40'
NORTH

32 EXTERIOR IMPROVEMENTS SCHEDULE

SYMBOL	DESCRIPTION	ESTIMATED QTY	DETAIL
32-01	CONCRETE: PEDESTRIAN CONCRETE WALK; 4" – 3,000 PSI CONCRETE; FIBER REINFORCED; LIGHT BROOM FINISH; TO BE NATURAL GRAY IN COLOR.	3,919 SF	1/LH500
32-02	CONCRETE: RIBBON CURB; 12" - 3,000 PSI; NATURAL GRAY IN COLOR	328 LF	5/LH500
32-03	WHEELSTOP: PRECAST CONCRETE; 10"X6'	17	3/LH500
32-04	STAIRS: 3,000 PSI REINFORCED CONCRETE; LIGHT BROOM FINISH; COLOR: NATURAL GRAY	52 LF	7/LH501
32-05	CONCRETE: VEHICULAR 6" REINFORCED; 3,500 PSI; MEDIUM BROOM FINISH; COLOR: NATURAL GRAY; MAX 2% SLOPE IN ANY DIRECTION	477 SF	7/LH500
32-06	ASPHALT PAVING: VEHICULAR	1,536 SF	8/LH501
32-07	COATING: SEAL COAT EXISTING PARKING AREA. CONTRACTOR TO FURNISH & INSTALL ASPHALT PAVEMENT SEALER 'SEALMASTER' OR APPROVED EQUAL ON EXISTING PARKING AREA IN LIMITS AS NOTED IN PLAN. APPLY 2 COATS WITH SQUEEGEE AT THE RATE OF 1 GAL. PER +/-50 S.F. CLEAN & PREP PARKING AREA SURFACE PRIOR TO INSTALLATION.	8,228 SF	
32-08	FENCE: 10' VINYL COATED CHAINLINK; COLOR: BLACK	313 LF	1/LH504
32-09	FENCE: 4' VINYL COATED CHAINLINK; COLOR: BLACK	1,129 LF	3/LH504
32-10	16'X34' SHELTER: CEDAR FOREST PRODUCTS OR EQUAL; MODEL (EDIT - #RH52378-10EH-CUS); INSTALL ACCORDING TO MANUFACTURER'S RECOMMENDATIONS; COLOR BY OWNER; SUBMIT SHOP DRAWINGS FOR APPROVAL PRIOR TO INSTALLATIONS	1	1/LH503
32-11	COLUMN: 36" HIGH X 24" SQ; CMU PAINTED COLUMN; 4" PRE-CAST CONCRETE CAP; COLOR: TBD	6	2/LH503
32-12	GATE: 4' VINYL COATED CHAINLINK GATE; COLOR: BLACK	3	2/LH504
32-13	GATE: 10' SERVICE ENTRANCE	1	4/LH500
32-14	MARKER: HANDICAP PARKING STRIPING; COLOR BLUE; 4" TYP.	1	5/LH501
32-15	MARKER: PEDESTRIAN CROSSWALK STRIPING; COLOR WHITE; TYP.	1	
32-16	MARKER: PARKING LINE; 4" PAINTED PARKING LINE; COLOR: WHITE; TYP.	11	
32-17	PICKLEBALL COURT PAINT (SEE SHEET 502)	3	1/LH502
32-18	PICKLEBALL COURT NET & POST SYSTEM	3	2/LH502
32-19	PICKLEBALL COURT: ASPHALT	6,678 SF	4/LH502
32-20	BENCH: CONCRETE; 8' - 3,000 PSI; COLOR: NATURAL GRAY	3	8/LH502
32-21	BENCH: HAMILTON BY ULTRASITE OR APPROVED EQUAL; MODEL 91C-S6-6' BENCH WITH CENTER ARM; COLOR BLACK; SURFACE MOUNT	3	9/LH502
32-22	TRASH RECEPTACLE: ULTRASITE OR EQUAL; MODEL CL-36RB14; COLOR: BLACK	1	10/LH501
32-23	DRINKING FOUNTAIN WITH BOTTLE FILLER: BY HALSEY TAYLOR OR EQUAL; MODEL LK4430BF1M; COLOR BLACK; ENSURE ADA ACCESSIBILITY - DIRECT QUESTIONS TO LA.	1	6/LH500
32-26	BOLLARD: 6X6 PRESSURE TREATED PINE; COLOR: FOREST GREEN	22	4/LH501
32-27	HANDRAIL: STEEL RAILING; POWDER COATED; COLOR: BLACK; PROVIDE SHOP DRAWINGS	4	2/LH501
32-28	SIGNAGE: HANDICAP PARKING SIGNAGE - PER ADA REQUIREMENTS	3	6/LH501
32-29	SIGNAGE: VAN ACCESSIBLE SIGNAGE - PER ADA REQUIREMENTS	1	9/LH501
32-30	SIGNAGE: COURT RULES; 18"X24" ALUMN. PROVIDE SHOP DRAWINGS FOR APPROVAL FOR INSTALLATION AND ANCHORING	1	5/LH502
32-31	SIGNAGE: COURT NUMBER; 18" X 18" ALUMN. PROVIDE SHOP DRAWINGS FOR APPROVAL FOR INSTALLATION AND ANCHORING	3	6/LH502
32-32	UTILITY WATER LINE: CONNECT TO EXISTING DOMESTIC UTILITY WATER LINE; 1" - SCHEDULE 40 PVC.	69 LF	
32-33	WINDSCREEN: BY BALL FABRICS OR APPROVED EQUAL; 5'-8' IN HEIGHT; HEMMED WITH BRASS GROMMETS AT 12" O.C.; COLOR: BLACK; SUBMIT SHOP DRAWINGS FOR APPROVAL PRIOR TO INSTALLATION.	313 LF	

QUANTITY TAKEOFF DISCLAIMER:

QUANTITIES NOTED ON PLANS ARE OFFERED AS A CONVENIENCE TO THE CONTRACTOR FOR BID PURPOSES ONLY. CONTRACTOR SHALL VERIFY ALL QUANTITIES AND REPORT ANY DISCREPANCIES TO THE LANDSCAPE ARCHITECT.

WAS DESIGN landscape architects
landscape architecture
land planning
placemaking
Foley, Alabama
P. 251.948.7181
Mobile, Alabama
P. 251.344.4023
Jackson, Mississippi
P. 601.790.0781
Pensacola, Florida
P. 850.203.4252
www.was-design.com

A Landscape Development Plan for
Hillsdale Park Pickleball Courts
PR-073-22 Mobile, Alabama

Revisions

No.	Date	Revisions / Submissions
	08.31.23	80% CLIENT REVIEW
	09.29.23	100% CONSTRUCTION DRAWINGS

© Copyright 2023 WAS Design Inc. These documents and their contents are the property of WAS Design. Any reproductions, revisions, modifications or use of these documents without the express written consent of WAS Desgin is prohibited by law.

CAD
Drawn
DCT
Project Manager
JEC
Principal
236010-029
Project No.
06.19.23
Date

Registration
STATE OF ALABAMA
JAMES ELLIS CROWE
REGISTERED LANDSCAPE ARCHITECT
6

Sheet Title
HARDSCAPE PLAN

Sheet No.
LH100

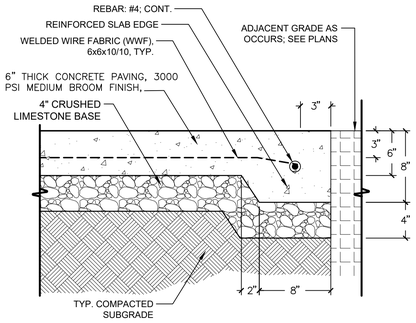

TYP. CONC. PAVING SECTION

7 6" VEHICULAR CONCRETE PAVING TYP.

1 1/2" = 1'-0" S-PA-CO-06

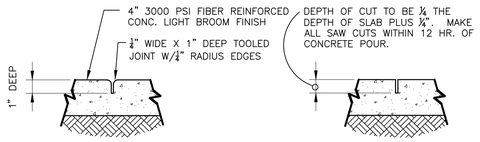

SCORE JOINT

SAWCUT SCORE JOINT

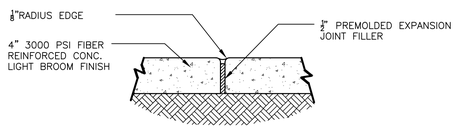

NOTE:
1. JOINT FILLER TO BE FLUSH WITH SIDEWALK SURFACE WHEN JOINT SEALER IS USED.
2. EXP. JOINT MATERIAL TO MEET ALDOT SPECIFICATIONS 832.01 & 832.02

EXPANSION JOINT

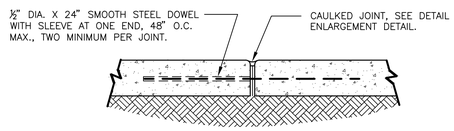

DOWELED CONSTRUCTION JOINT

2 TYPICAL CONCRETE PAVING JOINT DETAILS

1 1/2" = 1'-0" S-PA-CO-73

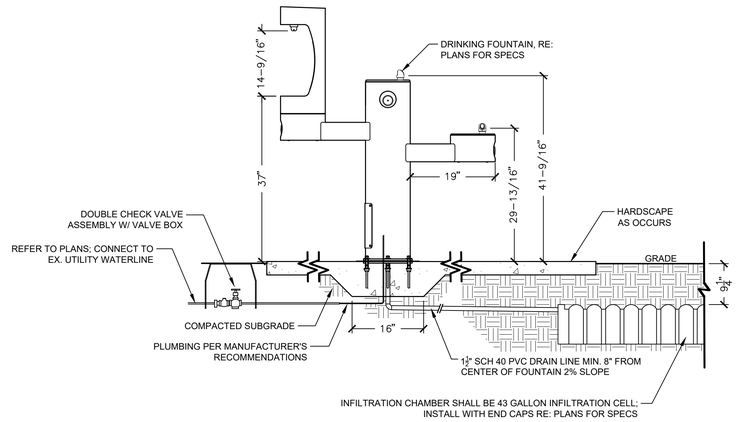

6 DRINKING FOUNTAIN W/BOTTLE FILLER & DRAIN CHAMBER

3/4" = 1'-0" SF-DR-13

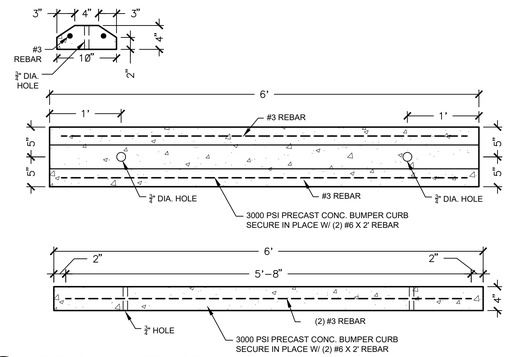

3 TYPICAL WHEEL STOP

1" = 1'-0" FURN-SC-03

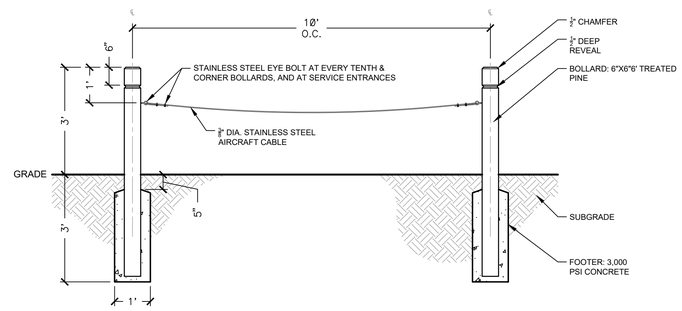

4 WOOD BOLLARD SERVICE GATE

1/2" = 1'-0"

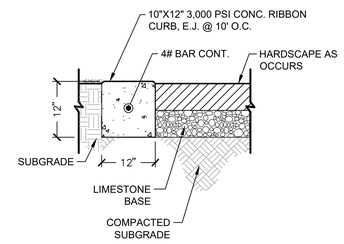

5 12" - RIBBON CURB

3/4" = 1'-0" S-PA-CO-106

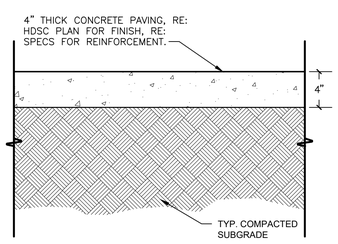

TYP. CONC. PAVING SECTION

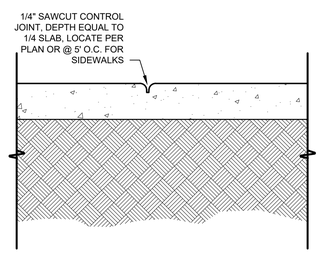

CONTROL JOINT

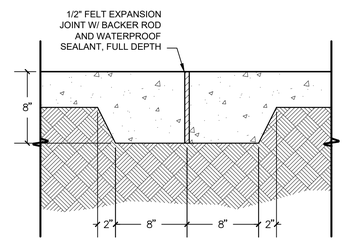

EXPANSION/CONSTRUCTION JOINT

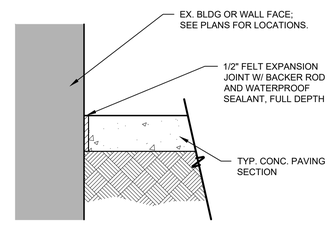

CONCRETE AT WALL/BLDG.

1 PEDESTRIAN CONCRETE PAVING

1 1/2" = 1'-0" S-PA-CO-11

was DESIGN landscape architects
landscape architecture
land planning
placemaking
Foley, Alabama
P. 251.948.7181
Mobile, Alabama
P. 251.344.4023
Jackson, Mississippi
P. 601.790.0781
Pensacola, Florida
P. 850.203.4252
www.was-design.com

A Landscape Development Plan for
Hillsdale Park Pickleball Courts
PR-073-22 Mobile, Alabama

Revisions

No.	Date	Revisions / Submissions
	08.31.23	80% CLIENT REVIEW
	09.29.23	100% CONSTRUCTION DRAWINGS

© Copyright 2023 WAS Design Inc. These documents and their contents are the property of WAS Design. Any reproductions, revisions, modifications or use of these documents without the express written consent of WAS Design is prohibited by law.

CAD
Drawn
DCT
Project Manager
JEC
Principal
236010-029
Project No.
06.19.23
Date

Registration
STATE OF ALABAMA JAMES ELLIS CROWE 6 REGISTERED LANDSCAPE ARCHITECT

Sheet Title

HARDSACPE DETAILS

Sheet No.

LH500

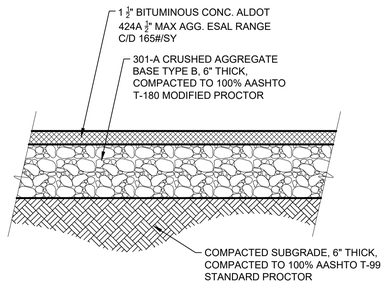

8 ASPHALT PAVING DETAIL

1 1/2" = 1'-0" 321216-07

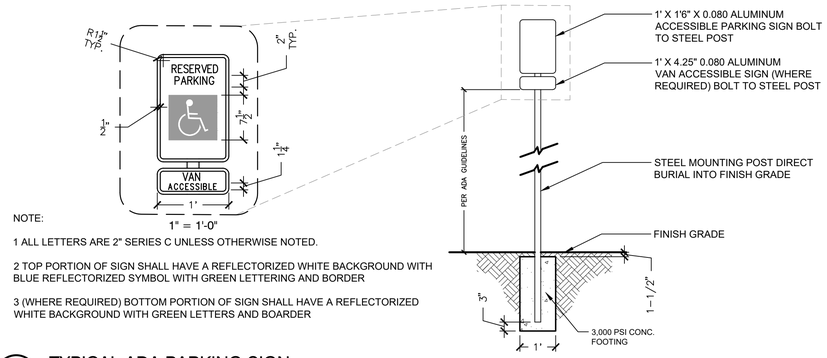

NOTE:

1 ALL LETTERS ARE 2" SERIES C UNLESS OTHERWISE NOTED.

2 TOP PORTION OF SIGN SHALL HAVE A REFLECTORIZED WHITE BACKGROUND WITH BLUE REFLECTORIZED SYMBOL WITH GREEN LETTERING AND BORDER

3 (WHERE REQUIRED) BOTTOM PORTION OF SIGN SHALL HAVE A REFLECTORIZED WHITE BACKGROUND WITH GREEN LETTERS AND BOARDER

9 TYPICAL ADA PARKING SIGN

1/2" = 1'-0" SIGN-SI-15

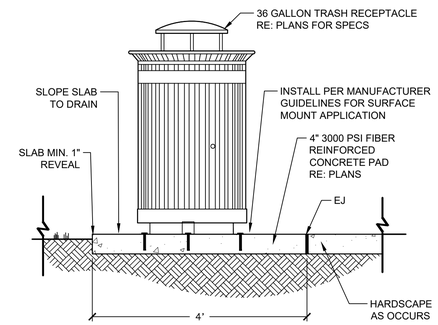

10 TRASH RECEPTACLE ON CONCRETE PAD

3/4" = 1'-0" S-FU-16

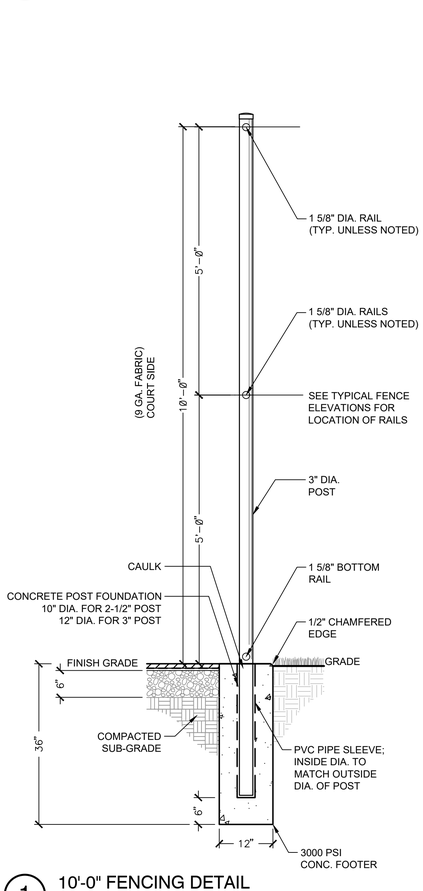

1 10'-0" FENCING DETAIL

3/4" = 1'-0"

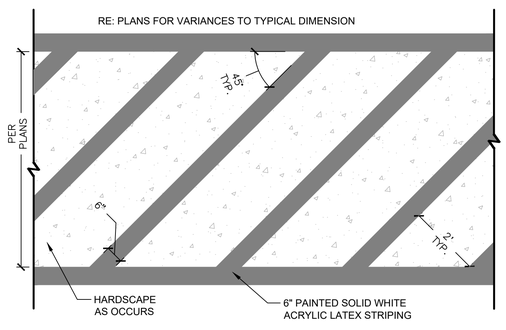

5 PAVEMENT STRIPING

1/2" = 1'-0" S-13

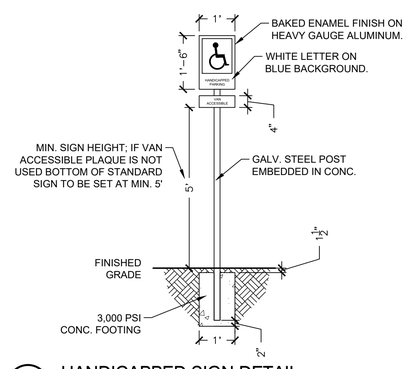

6 HANDICAPPED SIGN DETAIL

1/2" = 1'-0" S-FU-05

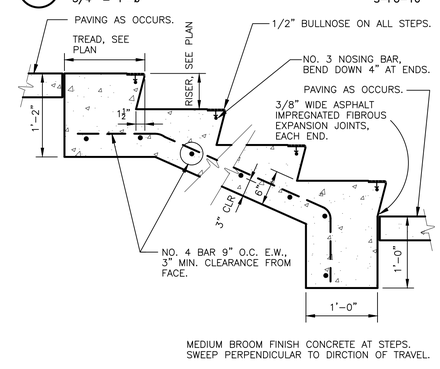

7 CONCRETE STAIRS TYP.

1" = 1'-0" 321319.13-01

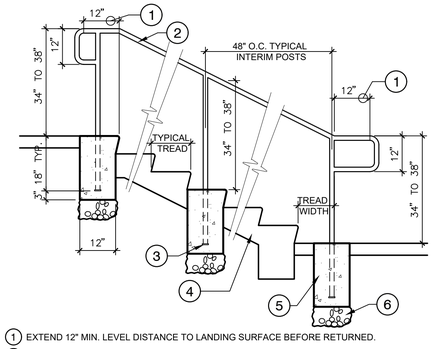

1. EXTEND 12" MIN. LEVEL DISTANCE TO LANDING SURFACE BEFORE RETURNED.
2. 11/2" DIAMETER SCHED 40STEEL PIPE HANDRAIL, SEE SPECIFICATIONS FOR PAINTING AND FINISH
3. 3x3x1/2" STEEL PLATE WELDED TO BOTTOM ON RAIL, TYP.
4. STAIRS AS OCCURS, SEE PLANS AND DRAWINGS.
5. TYPICAL CONC. POST FOOTING.
6. 6" THICK CRUSHED ROCK BASE, TYPICAL.

2 STAIR PIPE HANDRAIL TYP.

1/2" = 1'-0" FX-AC-FX-RLS-03

NOTE:

1. ALL PAINTED LINES SHALL BE BLUE ACRYLIC LATEX UNLESS OTHERWISE NOTED.
2. CROSS HATCHING IN ACCESS AISLE SHALL BE 4" WIDE SOLID BLUE LINES.
3. DIMENSIONS SHOWN ARE ADA MINIMUMS, REFER TO LOCAL CODES FOR FURTHER REGULATORY DIMENSIONS

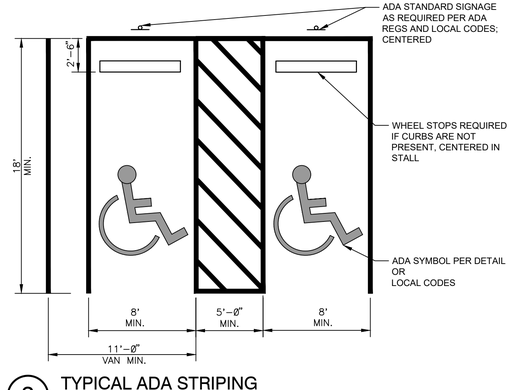

3 TYPICAL ADA STRIPING

3/16" = 1'-0" SIGN-SI-09

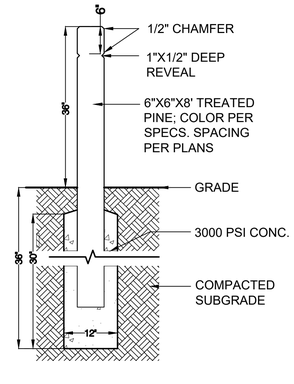

4 WOOD BOLLARD

3/4" = 1'-0" S-03

landscape architecture
land planning
placemaking

Foley, Alabama
P. 251.948.7181
Mobile, Alabama
P. 251.344.4023
Jackson, Mississippi
P. 601.790.0781
Pensacola, Florida
P. 850.203.4252

WAS DESIGN landscape architects
www.was-design.com

A Landscape Development Plan for

Hillsdale Park Pickleball Courts

PR-073-22 Mobile, Alabama

Revisions

No.	Date	Revisions / Submissions
	08.31.23	80% CLIENT REVIEW
	09.29.23	100% CONSTRUCTION DRAWINGS

© Copyright 2023 WAS Design Inc. These documents and their contents are the property of WAS Design. Any reproductions, revisions, modifications or use of these documents without the express written consent of WAS Design is prohibited by law.

CAD
Drawn
DCT
Project Manager
JEC
Principal
236010-029
Project No.
06.19.23
Date

Registration

STATE OF ALABAMA JAMES ELLIS CROWE 6 REGISTERED LANDSCAPE ARCHITECT

Sheet Title

HARDSCAPE DETAILS

Sheet No.

LH501

1. THOROUGHLY CLEAN AND PRESSURE WASH THE COURTS UTILIZING A PRESSURE WASHER WITH AT LEAST MOVE 3500 PSI. AREAS OF ALGAE, DIRT, SAND, OIL, ETC. SHOULD BE REMOVED.
2. ALL SEAMS, ROLLER MARKS, ETC. SHOULD BE PATCHED AND LEVELED WITH ACRYLIC RESURFACER AS DESCRIBED IN ITEM 4.
3. ALL LOW AREAS MUST BE LEVELED TO WITHIN 1/8" WITH AMERICAN PATCH BINDER. MIX 100 LBS. SILICA SAND WITH 2 GALLONS OF PORTLAND CEMENT AND ADD BINDER UNTIL DESIRED CONSISTENCY IS ACHIEVED.
4. OVER THE ASPHALTIC SURFACE COURSE, APPLY TWO (2) COATS OF ACRYTECH ACRYLIC RESURFACER IN ACCORDANCE WITH THE MANUFACTURER'S DIRECTIONS AT A RATE OF NOT LESS THAN .04 – .06 GALLONS PER SQUARE YARD (32 – 48 GALLONS FOR 800 SQUARE YARDS). DILUTION RATE WILL NOT EXCEED 1 PART WATER, 2 PARTS CONCENTRATE.
5. THE THIRD COAT SHOULD BE ACRYTECH COLOR CONCENTRATE IN ACCORDANCE WITH THE MANUFACTURER'S DIRECTIONS AT A RATE OF NOT LESS THAN .03 – .06 GALLONS PER SQUARE YARD (24 – 48 GALLONS FOR 800 SQUARE YARDS). DILUTION FOR THIS TEXTURE COAT SHALL BE 2 PARTS CONCENTRATE, 1 PART WATER, AND ONE PART SAND. (COLOR: LIGHT GREEN/DARK GREEN)
6. THE FINAL FINISH COAT OF ACRYTECH SHALL BE APPLIED AS DIRECTED BY THE MANUFACTURER AT A RATE OF NOT LESS THAN .03 – .06 GALLONS PER SQUARE YARD (24 – 48 GALLONS FOR 800 SQUARE YARDS). DILUTION FOR THIS TEXTURE COAT SHALL BE 2 PARTS CONCENTRATE, 1 PART WATER, AND ONE PART SAND. (COLOR: LIGHT GREEN/DARK GREEN)
7. WHITE PLAYING LINES FOR TENNIS AND BLENDED PLAYING LINES FOR PICKLE BALL, CONFORMING TO THE AMERICAN SPORTS BUILDERS ASSOCIATION SPECIFICATIONS, SHALL BE LAID OUT AND ACYRTECH TEXTURED LINE PAINT (100% ACRYLIC LATEX) APPLIED BY BRUSH OR ROLLER USING MASKING TAPE OR TEMPLATES
8. PRIOR TO THE ASPHALT INSTALLATION, 2'X2'X3' FOUNDATIONS ARE EXCAVATED FOR THE NET POSTS. A 3" ID SCHEDULE 40 PVC SLEEVE IS EMBEDDED IN 3000PSI CONCRETE IN THE NET POST FOUNDATIONS. AN AMERICAN CENTER ANCHOR IS INSTALLED IN A 1'X1'X1' CONCRETE FOUNDATION.

7 COURT SURFACING SYSTEM

3/4" = 1'-0" REC-PB-36

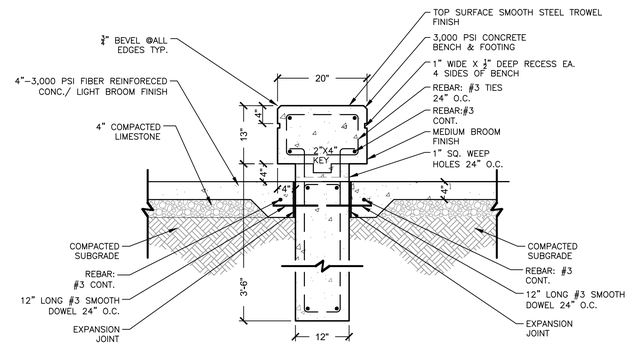

8 NEW CONCRETE BENCH DETAIL

3/4" = 1'-0" S-FU-27

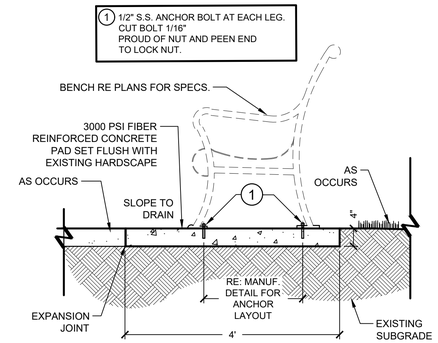

9 BENCH ON CONCRETE PAD

3/4" = 1'-0" S-FU-19

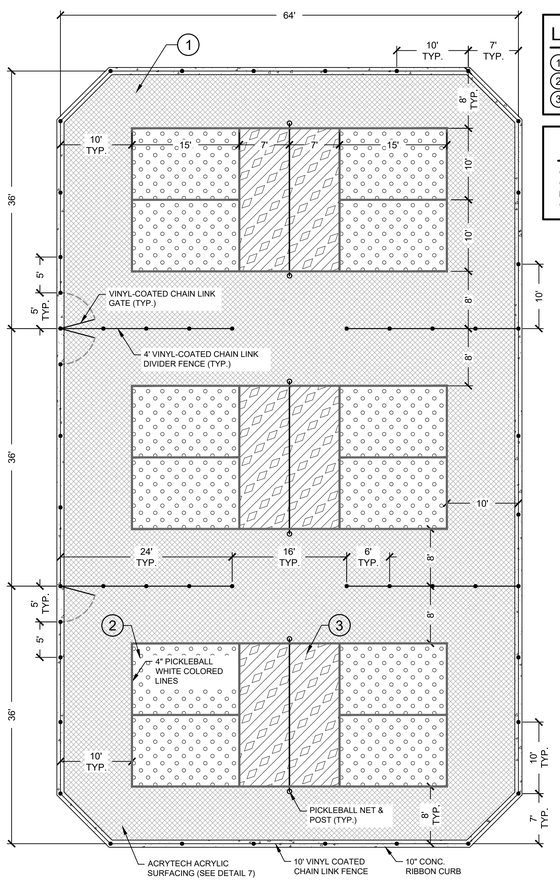

LEGEND

1. COLOR "A"
2. COLOR "B"
3. COLOR "C"

NOTES

COLORS BY OWNER FROM MANUF. STANDARD COLOR CHART

1 PICKLE BALL COURT PLAN

1" = 10' REC-PB-23

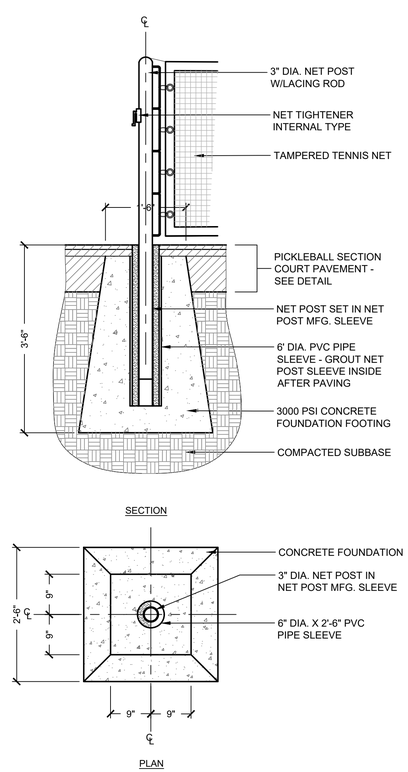

2 NET POST DETAIL

3/4" = 1'-0" REC-PB-03

5 COURT RULES SIGN DETAIL

1 1/2" = 1'-0" REC-PB-09

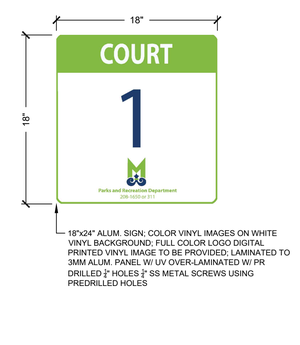

6 COURT NUMBER SIGN

1 1/2" = 1'-0" REC-PB-43

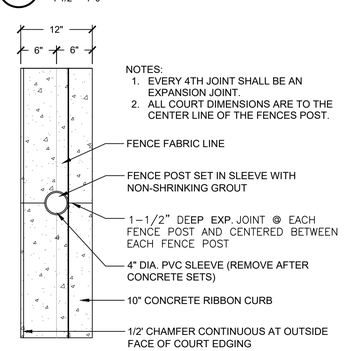

NOTES:
1. EVERY 4TH JOINT SHALL BE AN EXPANSION JOINT.
2. ALL COURT DIMENSIONS ARE TO THE CENTER LINE OF THE FENCES POST.

3 PLAN - CONCRETE EDGING AT COURT

1" = 1'-0" S-FENC-29

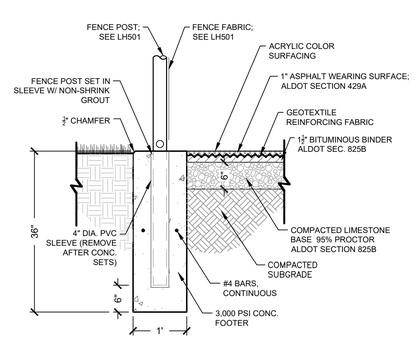

4 TYPICAL COURT SECTION

3/4" = 1'-0" REC-PB-26

landscape architecture
land planning
placemaking

Foley, Alabama
P. 251.948.7181
Mobile, Alabama
P. 251.344.4023
Jackson, Mississippi
P. 601.790.0781
Pensacola, Florida
P. 850.203.4252

WAS DESIGN landscape architects www.was-design.com

A Landscape Development Plan for
Hillsdale Park Pickleball Courts
PR-073-22 Mobile, Alabama

Revisions

No.	Date	Revisions / Submissions
	08.31.23	80% CLIENT REVIEW
	09.29.23	100% CONSTRUCTION DRAWINGS

© Copyright 2023 WAS Design Inc. These documents and their contents are the property of WAS Design. Any reproductions, revisions, modifications or use of these documents without the express written consent of WAS Design is prohibited by law.

CAD
Drawn
DCT
Project Manager
JEC
Principal
236010–029
Project No.
06.19.23
Date

Registration

STATE OF ALABAMA JAMES ELLIS CROWE 6 REGISTERED LANDSCAPE ARCHITECT

Sheet Title

HARDSCAPE DETAILS

Sheet No.

LH502

SCALE: 1/4" - 1'

Model #: RHS1634

Design Criteria: Structure shall be designed to meet site specific snow and wind load design criteria using most current applicable building codes. All structural members are ASTM A-500 U.S. grade B steel. Welded connection plates shall be ASTM A-36 hot rolled steel. All fabrication performed to latest AISC standards by AWS Certified welders. All framing connections are done using A325 grade bolts within concealed access openings from above and will later be concealed by the roofing. All roof framing shall be flush against the roof decking to eliminate the possibility of bird nesting.

Tubular Steel Columns and Beams: Standard column dimension shall be 5" x 5" x 3/16" tubular steel welded to 5/8" base plates for surface mounting. Main support beams are 7" x 5" x 3/16" and purlins are 5" x 3" x 1/8". Steel sizes are preliminary and may change due to ongoing review and final engineering.

Roofing: 24 Ga. pre-cut steel Multi-Rib panels with Kynar 500 finish in a variety of colors with white underside. Standard roof slope is a 4/12 pitch with a eave height of 8'-0". Attached to structural framing with exposed self tapping screws painted to match roof color. Matching 24 Ga. trim included.

Frame Finish: All steel framework will receive a corrosion protective TGIC Polyester powder coat, electro-statically applied and cured at 400°F. A large selection of standard colors are available.

Foundation: All columns need to be anchored to concrete footings (footing design provided separately). Columns can be surface mounted to footings with anchor bolts at or below finish slab elevation or they can be embedded directly into the footing without base plates upon request. Anchor bolts and bracing templates are included. Optional base plate covers are available at an additional cost.

Hardware: All structural hardware and roofing fasteners shall be provided.

Warranty: 10 years against manufacturer defects.

Not Included: Concrete work of any kind, unloading of product and installation.

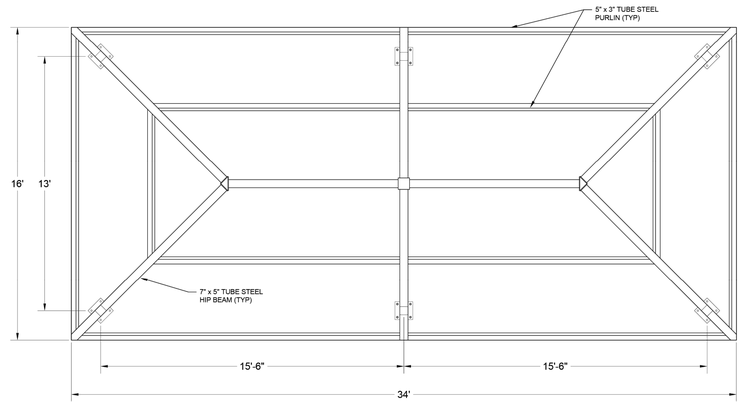

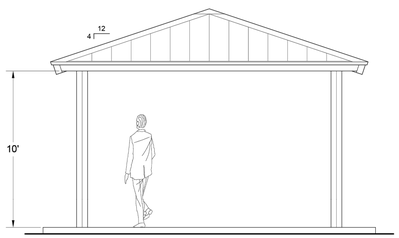

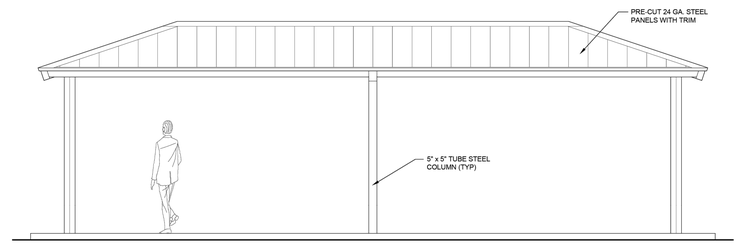

CFP CEDAR FOREST PRODUCTS
P.O. BOX 145
WEST OLIVE, MI 49460
800-552-9495
WWW. CEDARFORESTPRODUCTS.COM

PRELIMINARY
NOT FOR CONSTRUCTION

© Copyright 2018 these drawings are the intelectual property of C.F.P. LLC and shall not be copied or disclosed to any unauthorized parties in part or its entirety without our written permission, and they shall not be used for construction unless approved by a C.F.P. Representative.

MODEL NUMBER:	RHS1634	SHOWN WITH STANDARD OPTIONS
DESCRIPTION:	16x34 Rect Hip Shelter	
Possible Options:	☐ 29ga METAL ROOF ☐ STANDING SEAM ROOF ☐ CEDAR SHINGLES	☐ METAL BASE SHOES ☐ STEEL COLUMNS ☐ CUSTOM ROOF PITCH ☐ LIGHTNING PROTECTION ☐ 2 TIER ROOF ☐ CUPOLA

REVISION DATES:	DRAWN BY:	DATE:
REV:	JES-557A	11-1-18
REV:	SHEET:	
REV:	1 OF 1	
REV:		

NOTES

COORDINATE ELECTRICAL CUT-OUTS, AS INDICATED ON THE ELECTRICAL PLANS, WITH PAVILION MANUFACTURER.

DESIGN CRITERIA

1. 2021 INTERNATIONAL BUILDING CODE.
2. DEAD LOAD: STRUCTURE SELF-WEIGHT
3. ROOF LOAD: 20PSF
4. WIND LOAD: 140 MPH, EXPOSURE B
5. RISK CATEGORY I

ERIC ADAMS
PROFESSIONAL ENGINEER
(FOUNDATION)

STRUCTURAL
PROJECT MANAGER

MOBILE, ALABAMA

251-344-7073 CELL

Registration

ALABAMA LICENSED No. 17098 PROFESSIONAL ENGINEER ERIC J. ADAMS

9/14/23

CONCRETE & REINFORCEMENT STEEL NOTES:

1. DESIGN, MATERIAL, WORKMANSHIP SHALL BE IN ACCORDANCE WITH THE CURRENT EDITION OR REVISION OR THE FOLLOWING STANDARDS: NOTED OTHERWISE:
   - ACI 318 "BUILDING CODE REQUIREMENTS FOR REINFORCED CONCRETE"
   - ACI 315 "MANUAL OF STANDARD PRACTICE FOR DETAILING REINFORCED CONCRETE STRUCTURES"
   - ACT 301 "SPECIFICATIONS FOR STRUCTURAL CONCRETE FOR BUILDINGS"
   - CRSI "RECOMMENDED PRACTICE FOR PLACING REINFORCING STEEL BARS CONFORMING TO.
2. CONCRETE SHALL DEVELOP 3000 PSI COMPRESSIVE STRENGTH IN 28 DAYS
3. REINFORCING STEEL SHALL BE DEFORMED ASTM A615 S1, GRADE 60.
4. WELDED WIRE FABRIC SHALL CONFORM TO ASTM A 185.
5. BAR SPLICES SHALL BE STAGGERED IN ANY ONE LOCATION UNLESS NOTED.
6. ALL REINFORCING HOOKS SHALL BE STANDARD ACI HOOKS
7. ALL EXPOSED EDGES OF CONCRETE SHALL HAVE A $\frac{3}{4}$" 4° CHAMFER.
8. A $\frac{1}{2}$" BITUMASTIC PRE FORMED EXP. JOINT SHALL BE PLACED AT ALL LOCATIONS NOTED ON THE DRAWING AND ALSO AROUND ALL FOUNDATIONS WHICH PROJECT THROUGH CONCRETE SLABS.
9. A 6 MIL. POLYETHYLENE VAPOR BARRIER IS REQ. UNDER ALL SLABS ON GRADE.

STEEL & HARDWARE SHOP NOTES:

1. ALL STRUCTURAL STEEL TUBING SHALL BE ASTM A-500 GRADE B.
2. ALL OTHER STEEL (PLATES, GUSSETS, ETC.) SHALL BE ASTM A-36.
3. ALL WELDING IS TO BE DONE ACCORDANCE WITH LATEST AWS STANDARDS. ALL WELDS ARE TO DEVELOP FULL STRENGTH OF COMPONENT PARTS. (E7081 ELECTRODES)
4. ALL BOLTS TO BE ASTM A-325 & THREADED ROD TO BE ASTM B-7.
5. ALL FABRICATED STEEL & STRUCTURAL TUBES TO BE SAND BLASTED TO A WHITE CONDITION. THEN COVERED WITH AN ELECTRO-STATICALLY APPLIED CORROSION RESISTANT PRIMER. THEN A TWO COMPONENT, CORROSION RESISTANT ELECTRO-STATICALLY APPLIED, OVEN CURED TO 400 DEGREES COATING SYSTEM IS APPLIED WHICH COMBINES THE PROPERTIES OF TWO HIGH PERFORMANCE SYSTEMS. (EPOXY & POLYURETHANE).

ROOF MATERIAL:

METAL ROOF DECK SHALL BE 24 GA STEEL, 36" WIDE, 1 3/16" DEEP, FY=80KSI

ERECTION NOTES:

ALL MEMBERS MUST BE PROPERLY BRACED UNTIL THE COMPLETE STRUCTURAL SYSTEM HAS BEEN CONSTRUCTED.

1 NOTES
3/4" = 1'-0"
REC-PB-21

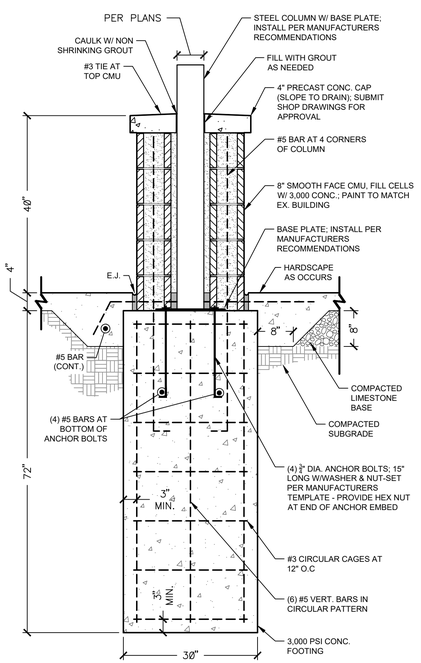

2 STRUCTURAL FOOTING
3/4" = 1'-0"
REC-PB-33

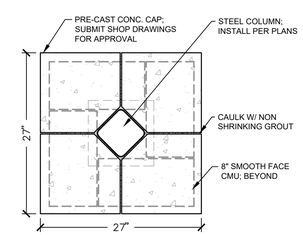

45° COLUMN

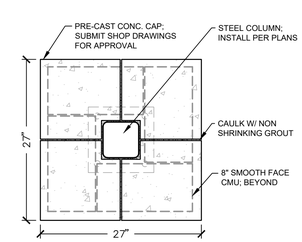

TYP. COLUMN

3 PAVILION COLUMN PLAN VIEW
1" = 1'-0"
REC-PB-53

landscape architecture
land planning
placemaking

Foley, Alabama
P. 251.948.7181
Mobile, Alabama
P. 251.344.4023
Jackson, Mississippi
P. 601.790.0781
Pensacola, Florida
P. 850.203.4252

WAS DESIGN landscape architects
www.was-design.com

A Landscape Development Plan for
Hillsdale Park Pickleball Courts
PR-073-22 Mobile, Alabama

Revisions

No.	Date	Revisions / Submissions
	08.31.23	80% CLIENT REVIEW
	09.29.23	100% CONSTRUCTION DRAWINGS

© Copyright 2023 WAS Design Inc. These documents and their contents are the property of WAS Design. Any reproductions, revisions, modifications or use of these documents without the express written consent of WAS Design is prohibited by law.

CAD
Drawn
DCT
Project Manager
JEC
Principal
236010-029
Project No.
06.19.23
Date

Registration

STATE OF ALABAMA JAMES ELLIS CROWE 6 REGISTERED LANDSCAPE ARCHITECT

Sheet Title

HARDSCAPE DETAILS

Sheet No.

LH503

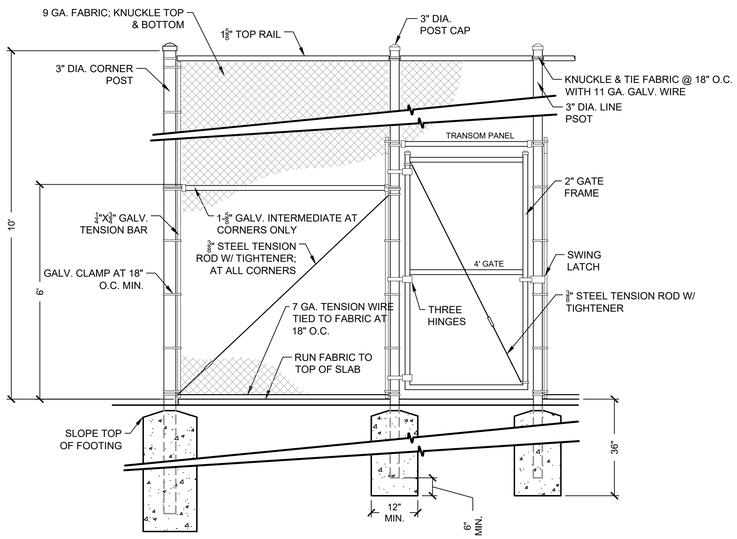

2 TYPICAL 10FT CHAIN LINK FENCE WITH GATE

1/2" = 1'-0"

S-FENC-36

LEGEND

1. TERMINAL POST: 2-7/8" POST
2. TERMINAL POST: 2-7/8" POST CAP
3. 1/4" BY 4" TENSION BAR
4. GALV. TENSION CLAMP
5. TOP RAIL: 1-5/8" PIPE
6. LINE POST: 1-7/8" PIPE
7. LINE POST: 1-7/8" POST CAP
8. 11 GA. CORE/8 GA. FINISH; KNUCKLE TOP & BOTTOM; CHAINLINK FABRIC (2"MESH); CONTINOUS
9. 7 GA. COIL SPRING TENSION WIRE
10. 3,000 PSI CONCRETE FOOTER

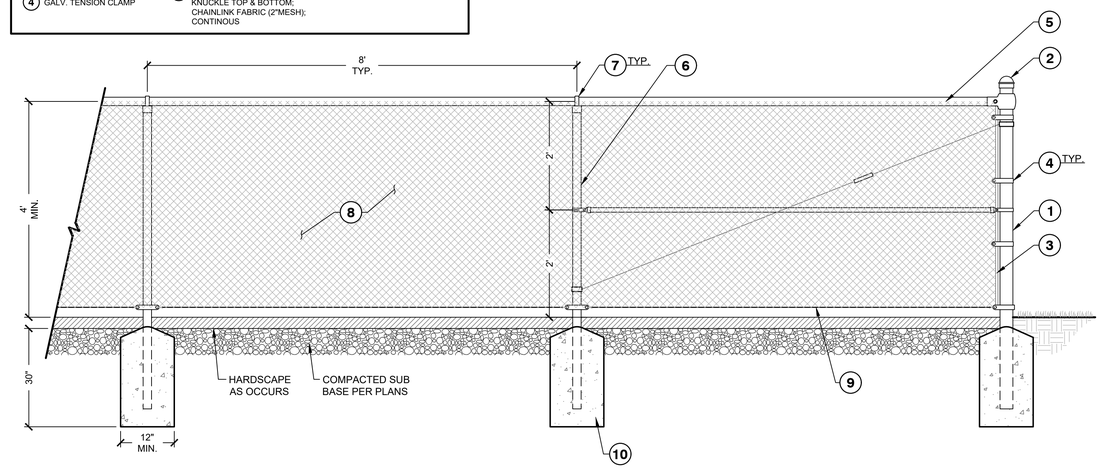

3 4 FT CHAINLINK DIVIDER FENCE

3/4" = 1'-0"

REC-PB-46

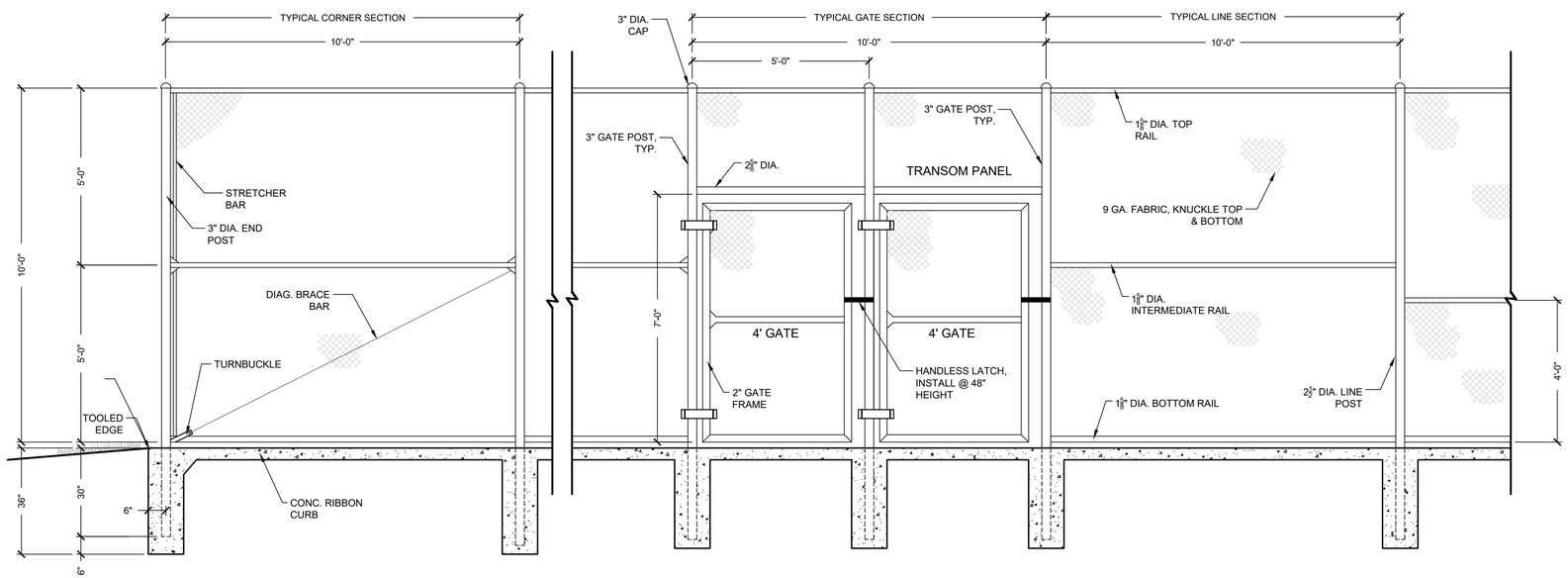

1 FENCE ELEVATION

1/2" = 1'-0"

REC-PB-12

landscape architecture
land planning
placemaking

Foley, Alabama
P. 251.948.7181
Mobile, Alabama
P. 251.344.4023
Jackson, Mississippi
P. 601.790.0781
Pensacola, Florida
P. 850.203.4252

WAS DESIGN landscape architects
www.was-design.com

A Landscape Development Plan for

Hillsdale Park Pickleball Courts

PR-073-22 Mobile, Alabama

Revisions

No.	Date	Revisions / Submissions
	08.31.23	80% CLIENT REVIEW
	09.29.23	100% CONSTRUCTION DRAWINGS

© Copyright 2023 WAS Design Inc. These documents and their contents are the property of WAS Design. Any reproductions, revisions, modifications or use of these documents without the express written consent of WAS Design is prohibited by law.

CAD
Drawn
DCT
Project Manager
JEC
Principal
236010-029
Project No.
06.19.23
Date

Registration

STATE OF ALABAMA
JAMES ELLIS CROWE
6
REGISTERED LANDSCAPE ARCHITECT

Sheet Title

HARDSCAPE DETAILS

Sheet No.

LH504

ELECTRICAL SPECIFICATIONS

1. GENERAL ELECTRICAL:
   - 1.1. THE CONTRACTOR SHALL FURNISH ALL LABOR, MATERIALS AND EQUIPMENT NECESSARY FOR THE INSTALLATION OF A COMPLETE ELECTRICAL SYSTEM AS INDICATED WITHIN THESE DRAWINGS. ALL WORK SHALL BE INSTALLED IN STRICT ACCORDANCE WITH ALL APPLICABLE CODES AND ORDINANCES AND WITH MANUFACTURER'S RECOMMENDATIONS.
   - 1.2. THE CONTRACTOR SHALL CAREFULLY EXAMINE THE ELECTRICAL DRAWINGS PRIOR TO SUBMITTING HIS BID. THE CONTRACTOR WILL BE REQUIRED TO FURNISH, INSTALL AND CONNECT ALL ITEMS AS INDICATED ON THE DRAWINGS.
   - 1.3. THE OWNER / ENGINEER SHALL BE NOTIFIED OF ANY CONFLICTS, OR INTERFERENCES THAT OCCUR BETWEEN INDIVIDUAL DRAWINGS.
   - 1.4. ALL MATERIALS AND EQUIPMENT SHALL BE INSTALLED IN A NEAT, FIRST CLASS, WORKMANLIKE MANNER, TO THE APPROVAL OF THE OWNER / ENGINEER AND GOVERNING AUTHORITIES.
   - 1.5. IN ADDITION TO THE MANUFACTURERS STANDARD GUARANTEES, THE CONTRACTOR SHALL GUARANTEE ALL MATERIALS, EQUIPMENT AND WORKMANSHIP AGAINST DEFECTS FOR ONE YEAR FROM THE DATE OF FINAL ACCEPTANCE, AND SHALL CORRECT ANY DEFECTS AT NO ADDITIONAL COST TO THE OWNER. ALL LAMPS SHALL BE GUARANTEED FOR 30 DAYS AFTER ACCEPTANCE.
   - 1.6. THE LOADS SHOWN FOR APPLIANCES AND EQUIPMENT ARE BASED ON DESIGN INFORMATION. THE CONTRACTOR SHALL VERIFY ALL APPLIANCE LOADS PRIOR TO RUNNING THE CIRCUIT. THE MINIMUM CIRCUIT REQUIREMENTS SHALL BE BASED ON THE APPLIANCE NAMEPLATE VALUE OR CODE REQUIREMENTS, WHICHEVER IS MORE STRINGENT. ADDITIONAL COMPENSATION SHALL NOT BE ALLOWED FOR APPLIANCE MODIFICATIONS BY THE CONTRACTOR.
   - 1.7. PRIOR APPROVAL: PRIOR APPROVAL SHALL BE REQUIRED FOR ANY MANUFACTURER OTHER THAN THOSE LISTED FOR ALL SPECIFIED ITEMS IN THESE DRAWINGS. SUBMIT ALL REQUESTS FOR PRIOR APPROVAL 2 WEEKS PRIOR TO BID OPENING. ENGINEER'S APPROVAL WILL BE IN THE FORM OF AN ADDENDUM.

2. CODES & STANDARDS:
   - 2.1. INSTALLATION AND MATERIALS SHALL COMPLY WITH THE LATEST ADOPTED EDITION OF THE FOLLOWING CODES & STANDARDS:
     - 2.1.1. NATIONAL ELECTRICAL CODE.
     - 2.1.2. NFPA 72. NATIONAL FIRE PROTECTION CODE.
     - 2.1.3. INTERNATIONAL BUILDING CODE.
     - 2.1.4. INTERNATIONAL ENERGY CONSERVATION CODE.
     - 2.1.5. NFPA 101.
     - 2.1.6. ADA .
     - 2.1.7. ANSI.
     - 2.1.8. NEMA.
     - 2.1.9. OSHA.
     - 2.1.10. UL.

3. ALTERATIONS & ADDITIONS TO EXISTING WORK:
   - 3.1. PROVIDE ALL NECESSARY ADDITIONS AND ALTERATIONS TO EXISTING WORK AS REQUIRED TO PROVIDE AND MAINTAIN A COMPLETE AND PROPER ELECTRICAL INSTALLATION.
   - 3.2. AS NECESSARY, RELOCATE EXISTING ELECTRICAL WORK SO OTHER TRADES CAN PURSUE THEIR WORK.
   - 3.3. MAINTAIN POWER TO EXISTING PORTIONS OF BUILDINGS FED FROM OR THROUGH AREA IN SCOPE OF THIS CONTRACT.
   - 3.4. COORDINATE ALL REQUIRED OUTAGES WITH OWNER.

4. BASIC MATERIALS & METHODS:
   - 4.1. ALL POWER AND DISTRIBUTION CABLING SHALL BE COPPER TYPE THWN/THHN.
   - 4.2. ALL ELECTRICAL EQUIPMENT, DEVICES, ETC. LOCATED OUTDOORS SHALL BE WEATHERPROOF.
   - 4.3. ELECTRICAL CONTRACTOR SHALL PROVIDE ADEQUATE AND PROPER SUPPORT FOR ALL ELECTRICAL OUTLETS, DEVICES, LIGHT FIXTURES, ETC. BUILT IN OR MOUNTED ON CEILINGS.
   - 4.4. CONDUIT ROUTINGS AND DEVICE/EQUIPMENT LOCATIONS SHOWN ARE DIAGRAMMATIC ONLY, CONTRACTOR SHALL FIELD ROUTE AND LOCATE AS REQUIRED. CONDUIT ROUTINGS SHALL BE PARALLEL OR PERPENDICULAR TO BUILDING LINES.
   - 4.5. COORDINATE ALL ELECTRICAL WORK WITH OTHER TRADES AND STRUCTURAL COMPONENTS.
   - 4.6. THE CONDUIT MATERIAL SHALL BE AS FOLLOWS:
     - 4.6.1. BELOW GRADE - RNC (POWER & SITE LIGHTING ONLY). ELBOWS >1-1/2" SHALL BE RGS.
     - 4.6.2. RISER FROM 36" BELOW GRADE - RGS.
     - 4.6.3. CONCEALED RISER FROM 36" BELOW GRADE - RNC (POWER ONLY).
     - 4.6.4. ABOVE GRADE SUBJECT TO PHYSICAL ABUSE - RGS.
     - 4.6.5. ABOVE GRADE NOT SUBJECT TO PHYSICAL ABUSE OR WEATHER - EMT.
     - 4.6.6. INDOORS NOT SUBJECT TO PHYSICAL ABUSE - EMT. OR METAL CLAD CABLE(AS ALLOWED BY LOCAL AUTHORITY HAVING JURISDICTION).
     - 4.6.7. FINAL CONDUIT CONNECTIONS TO HEAT PUMPS, AIR HANDLERS, EXHAUST FANS, AND WATER HEATERS SHALL BE LFMC WHETHER INTERIOR OR EXTERIOR.
   - 4.7. CONDUIT FITTINGS SHALL BE AS FOLLOWS:
     - 4.7.1. EMT - <=2" USE STEEL SET SCREW WITH INSULATED THROATS FOR INTERIOR/ USE COMPRESSION FITTINGS WITH INSULATED THROATS FOR EXTERIOR, >2" USE SET-SCREW STEEL WITH INSULATED THROATS.
     - 4.7.2. RGS - THREADED GALVANIZED STEEL.
     - 4.7.3. PVC - PVC APPROVED FOR THE USE.
     - 4.7.4. FMC - ZINC-PLATED STEEL OR CADMIUM-PLATED MALLEABLE IRON SCREW TYPE WITH INSULATED THROAT.
     - 4.7.5. LFMC - CADMIUM-PLATED MALLEABLE IRON OR STEEL COMPRESSION TYPE WITH INSULATED THROAT.
   - 4.8. ALL OUTLET BOXES SHALL BE 4"X4"X1-1/2" DEEP MINIMUM.
   - 4.9. ALL SIDEWALKS AND PARKING LOT ASPHALT AREAS THAT ARE CUT DUE TO NEW ELECTRICAL SERVICES SHALL BE REPAIRED TO MATCH EXISTING.
   - 4.10. ALL DIMENSIONS TO DEVICES AFF SHALL BE TO CENTERLINE UNLESS NOTED OTHERWISE.
   - 4.11. COORDINATE LOCATIONS OF ELECTRICAL EQUIPMENT, DEVICES, OUTLETS, FIXTURES, ETC., WITH ARCHITECTURAL PLANS, ELEVATIONS AND REFLECTED CEILING PLANS PRIOR TO ROUGH-IN WORK.

5. GROUNDING & BONDING:
   - 5.1. PROVIDE AN INSULATED EQUIPMENT GROUNDING CONDUCTOR IN ALL CONDUITS.
   - 5.2. GROUND RODS SHALL BE 3/4"X20' COPPERCLAD STEEL.
   - 5.3. BELOW GRADE CONNECTIONS SHALL BE EXOTHERMIC TYPE.
   - 5.4. ALL CABLES SHALL BE COPPER, ALL BOLTED CONNECTIONS SHALL BE BRONZE.
   - 5.5. PROVIDE A #6AWG MINIMUM GROUND IN EMT FROM EACH TELCOM BACKBOARD TO THE MAIN ELECTRICAL SERVICE GROUND.
   - 5.6. WHERE AVAILABLE, BOND TO BUILDING STRUCTURAL STEEL, BUILDING FOUNDATION STEEL, METAL WATER SERVICE PIPING.
   - 5.7. PROVIDE THREE 20' GROUND RODS IN TRIANGLE ARRANGEMENT ON 20' CENTERS FOR MADE ELECTRODE SYSTEM. MEASURE RESISTANCE AND ENSURE <25 OHMS.

6. IDENTIFICATION:
   - 6.1. PROVIDE ENGRAVED 1"X3" PHENOLIC LABELS FOR ALL PANELBOARDS, SAFETY SWITCHES, TRANSFORMERS, CABINETS, ETC.
   - 6.2. PAINT THE RACEWAY SYSTEM COUPLINGS AND BOX COVERS ABOVE CEILINGS FOR THE FOLLOWING SYSTEMS AS FOLLOWS:
     - 6.2.1. 240 VOLT SYSTEMS - BLACK.
     - 6.2.2. AFTER PAINTING, WRITE THE CIRCUIT NUMBER (I.E. "LPA-34") ON ALL BRANCH CIRCUIT JUNCTION BOX COVERS ABOVE CEILING WITH WHITE MARKER.

7. GENERAL WIRING DEVICES:
   - 7.1. SWITCHES - SPECIFICATION GRADE, 20 AMP, COLOR BY ARCHITECT.
   - 7.2. RECEPTACLES - SPECIFICATION GRADE, 20 AMP, NEMA 5-20R, COLOR BY ARCHITECT.
   - 7.3. COVER PLATES - NYLON, COLOR BY ARCHITECT.
   - 7.4. SPECIAL RECEPTACLES - PER THE DRAWINGS, VERIFY WITH EQUIPMENT BEING SUPPLIED.
   - 7.5. APPROVED MANUFACTURERS - HUBBELL, LEVITON, EAGLE, PASS & SEYMOUR.

8. SAFETY SWITCHES:
   - 8.1. GENERAL DUTY, VISIBLE BLADE, LOCKABLE, QUICK-MAKE/QUICK-BREAK, HORSEPOWER RATED, FUSED WHERE INDICATED.
   - 8.2. PROVIDE WITH GROUND LUG KIT.
   - 8.3. INTERIOR - NEMA 1.
   - 8.4. EXTERIOR - NEMA 3R.
   - 8.5. APPROVED MANUFACTURERS - SQUARE D, GENERAL ELECTRIC, SIEMENS.

9. PANELBOARDS:
   - 9.1. FRONT ACCESSIBLE, BOLT-ON MOLDED CASE C/BS, COPPER PHASE & NEUTRAL BUSSING, COPPER GROUND BAR, FULLY RATED (SERIES RATING NOT ALLOWED).
   - 9.2. ENCLOSURES SHALL BE DOOR-IN-DOOR CONSTRUCTION.
   - 9.3. INTERIOR - NEMA 1.
   - 9.4. ALL INTERIOR PANELBOARDS ARE TO HAVE FOUR SPARE 3/4" CONDUITS INSTALLED TO AN ACCESSIBLE SPACE FOR FUTURE.
   - 9.5. EXTERIOR - NEMA 3R.
   - 9.6. PROVIDE TYPE-WRITTEN DIRECTORY IN CLEAR SLEEVE ON INSIDE OF DOOR.
   - 9.7. APPROVED MANUFACTURERS - SQUARE D, GENERAL ELECTRIC, SIEMENS.

ELECTRICAL LEGEND

DISTRIBUTION & POWER EQUIPMENT:

- PANELBOARD.
- UTILITY METER.

SITE EQUIPMENT:

- HANDHOLE. SEE DETAIL.

GENERAL ELECTRICAL DEVICES:

- DUPLEX RECEPTACLE NEMA 5-20R. MOUNT 18" AFF UNLESS NOTED OTHERWISE. VERIFY DUPLEX MOUNTING REQUIREMENTS WITH ARCHITECTURAL DRAWINGS PRIOR TO ROUGH-IN. SUBSCRIPT INDICATES AS FOLLOWS:
  - G - GROUND FAULT CIRCUIT INTERRUPTER TYPE.
  - WP - GFI DEVICE WITH DIECAST WEATHERPROOF BACKBOX & DIECAST WEATHERPROOF (IN-USE) COVERPLATE. IN EXTERIOR LOCATIONS MOUNT 30" AFG. WEATHERPROOF OUTLET BOX COVERPLATES ARE TO BE LISTED AND IDENTIFIED AS "EXTRA-DUTY".
  - 84" - MOUNTING HEIGHT OF DEVICE AFF.
  - 21 - # INDICATES PANELBOARD CKT NUMBER

OTHER:

- CIRCUIT RUN CONCEALED ABOVE CEILING OR IN WALL.
- CIRCUIT RUN CONCEALED IN OR BELOW FLOOR SLAB OR UNDERGROUND.
- 2P2-9 — HOMERUN TO PANELBOARD. ANY CIRCUIT WITHOUT FURTHER DESIGNATION SHALL BE 2#12,#12G,1/2"C. TICK MARKS INDICATE # OF CONDUCTORS (EGC NOT SHOWN). MINIMUM SIZE ON 120V HOMERUNS GREATER THAN 50 FEET SHALL BE #10 AWG. MINIMUM SIZE ON 120V HOMERUNS GREATER THAN 100 FEET SHALL BE #8 AWG. MINIMUM SIZE ON 120V HOMERUNS GREATER THAN 160 FEET SHALL BE #6 AWG. MINIMUM SIZE ON 277V HOMERUNS GREATER THAN 100 FEET SHALL BE #10 AWG. INCREASE CONDUIT SIZE AS REQUIRED PER NEC. UNDERLINED TEXT INDICATES CIRCUIT DESIGNATION.
- F2L — LIGHT FIXTURE IDENTIFICATION TAG. SEE LIGHT FIXTURE SCHEDULE FOR SYMBOLS & DETAILS.
- 1 — SHEET NOTE TAG.
- 4LP1 — PANELBOARD, SWITCHBOARD, TRANSFORMER & ELECTRICAL EQUIPMENT IDENTIFICATION TAG.
- LEADERS.

SCOPE OF WORK - HILLSDALE PARK

THE BASE BID SCOPE OF WORK INCLUDES:

1. NEW PAVILION LIGHTING, RECEPTACLES AND ALL ASSOCIATED CONDUCTORS, CONDUIT, BOXES, ETC. AS REQUIRED FOR A FULLY FUNCTIONAL SYSTEM.
2. CONDUIT AND HANDHOLES FOR PICKLEBALL COURT LIGHTING.
3. UPGRADING THE EXISTING SERVICE TO INCLUDE THE PANEL, METER, WEATHERHEAD, GROUNDING SYSTEM AND ALL ASSOCIATED CONDUCTORS, CONDUIT, BOXES, ETC. AS REQUIRED FOR A FULLY FUNCTIONAL SYSTEM.

THE ALTERNATE SCOPE OF WORK INCLUDES:

1. A NEW FULLY OPERATIONAL MUSCO SYSTEM (INCLUDING CONTROLLER, PROGRAMMING, FIXTURES, POLES, ALL ASSOCIATED CONDUCTORS AND HARDWARE, ETC.) IS TO BE FURNISHED AND INSTALLED BY THE ELECTRICAL CONTRACTOR AS AN ADDITIVE ALTERNATE. THE SYSTEM IS TO BE INSTALLED PER MUSCO'S SPECIFICATIONS AND DIRECTION.

ELECTRICAL ABBREVIATIONS

A	AMPS	EWC	ELECTRIC WATER COOLER	MH	MANHOLE	SCA	SHORT CIRCUIT AMPS
AC	ABOVE COUNTER	EMT	ELECTRICAL METALLIC TUBING	MIN	MINIMUM	SF	SUPPLY FAN
AF	AMP FRAME	EQUIP	EQUIPMENT	MISC	MISCELLANEOUS	SPEC	SPECIFICATION
AFF	ABOVE FINISHED FLOOR	FMC	FLEXIBLE METAL CONDUIT	MLO	MAIN LUGS ONLY	SWBD	SWITCHBOARD
AFG	ABOVE FINISHED GRADE	FACP	FIRE ALARM SYSTEM CONTROL PANEL	MNT	MOUNTING HEIGHT	SWGR	SWITCHGEAR
AHU	AIR HANDLING UNIT	FU	FUSE	MTG	MOUNTING	TBB	TELECOMMUNICATIONS BONDING BACKBONE
AL	ALUMINUM	F/A	FIRE ALARM	MTS	MANUAL TRANSFER SWITCH	TR	TELECOMMUNICATIONS ROOM
ARCH	ARCHITECT OR ARCHITECTURAL	FLA	FULL LOAD AMPS	MV	MEDIUM VOLTAGE	TGB	TELECOMMUNICATIONS GROUNDING BUSBAR
AT	AMP TRIP	FLR	FLOOR	N1	NEMA 1	TMGB	TELECOMMUNICATIONS MAIN GROUNDING BUSBAR
ATS	AUTOMATIC TRANSFER SWITCH	FVNR	FULL VOLTAGE NON-REVERSING	N3R	NEMA 3R	TVSS	TRANSIENT VOLTAGE SURGE SUPPRESSION
ATU	AIR TERMINAL UNIT	GFI	GROUND FAULT INTERRUPTER	N/A	NOT APPLICABLE	TYP	TYPICAL
AWG	AMERICAN WIRE GAUGE	G	GROUND (OR GFI FOR RECEPTACLE SUBSCRIPT)	NA	NOT APPLICABLE	UFR	UNDERFLOOR RACEWAY
BAS	BUILDING AUTOMATION SYSTEM	GC	GENERAL CONTRACTOR	NEC	NATIONAL ELECTRICAL CODE	UG	UNDERGROUND
BJ	BONDING JUMPER	GND	GROUND	NESC	NATIONAL ELECTRICAL SAFETY CODE	UGE	UNDERGROUND ELECTRIC
BKR	CIRCUIT BREAKER	GEC	GROUNDING ELECTRODE CONDUCTOR	NEU	NEUTRAL	UGP	UNDERGROUND PRIMARY
BLDG	BUILDING	HH	HANDHOLE	OCPD	OVERCURRENT PROTECTION DEVICE	UGS	UNDERGROUND SECONDARY
BOD	BASIS OF DESIGN	HOA	HAND-OFF-AUTOMATIC	OFOI	OWNER FURNISHED OWNER INSTALLED	UL	UNDERWRITERS' LABORATORIES
C	CONDUIT	HP	HEAT PUMP OR HORSEPOWER	OFCI	OWNER FURNISHED CONTRACTOR INSTALLED	UNO	UNLESS NOTED OTHERWISE
C/B	CIRCUIT BREAKER	HVAC	HEATING, VENTILATION & AIR-CONDITIONING	OH	OVERHEAD	UPS	UNINTERRUPTIBLE POWER SUPPLY
CL	CURRENT LIMITING	IG	ISOLATED GROUND	OHE	OVERHEAD ELECTRIC	V	VOLT
C/L	CENTERLINE	IMC	INTERMEDIATE METAL CONDUIT	OHP	OVERHEAD PRIMARY	VA	VOLT-AMPERES
CLG	CEILING	JB	JUNCTION BOX	OHS	OVERHEAD SECONDARY	VAR	VOLT-AMPERES REACTIVE
CKT	CIRCUIT	k	KILO	PBD	PANELBOARD	VAV	VARIABLE AIR VOLUME UNIT
CT	CURRENT TRANSFORMER	kAIC	KILO-AMPERE INTERRUPTING CAPABILITY	PF	POWER FACTOR	W	WATTS
CU	COPPER	kCMIL	THOUSAND CIRCULAR MILS	PNL	PANELBOARD	WAO	WORK AREA OUTLET
DDC	DIRECT DIGITAL CONTROL	LCP	LIGHTING CONTROL PANEL	PT	POTENTIAL TRANSFORMER	WP	WEATHERPROOF
DEMO	DEMOLISH	LTG	LIGHTING	PWR	POWER	WSR	WITHSTAND RATING
EC	ELECTRICAL CONTRACTOR	LFMC	LIQUID TIGHT FLEXIBLE METAL CONDUIT	RCPT	RECEPTACLE	XFMR	TRANSFORMER
EGC	EQUIPMENT GROUNDING CONDUCTOR	LV	LOW VOLTAGE	REQD	REQUIRED	XP	EXPLOSION PROOF
ELEC	ELECTRICAL	MAX	MAXIMUM	RM	ROOM	ϕ	PHASE
EMGB	ELECTRICAL MAIN GROUNDING BUSBAR	MCA	MINIMUM CIRCUIT AMPACITY	RGS	RIGID GALVANIZED STEEL CONDUIT	72°	DEGREES
EF	EXHAUST FAN	MCC	MOTOR CONTROL CENTER	RNC	RIGID NON-METALLIC CONDUIT	Δ	DELTA
EX	EXISTING TO REMAIN	MCE	MAIN COMMUNICATIONS EQUIPMENT ROOM	RVSS	REDUCED VOLTAGE SOLID STATE	Ω	OHMS
EXT	EXTERIOR	MCM	THOUSAND CIRCULAR MILS	SA	SURGE ARRESTER		

ELECTRICAL NOTES

1. ENTIRE ELECTRICAL INSTALLATION SHALL BE IN ACCORDANCE WITH THE LATEST EDITION OF THE NATIONAL ELECTRICAL CODE.
2. CONDUIT ROUTINGS AND DEVICE/EQUIPMENT LOCATIONS SHOWN ARE DIAGRAMMATIC ONLY, CONTRACTOR SHALL FIELD ROUTE AND LOCATE AS REQUIRED. CONDUIT ROUTINGS SHALL BE NORTH/SOUTH OR EAST/WEST.
3. ALL ELECTRICAL EQUIPMENT AND DEVICES SHALL BE PROVIDED WITH SUITABLE PHENOLIC NAMEPLATES.
4. FOR OTHER THAN LIGHTING FIXTURES, CATALOG NUMBERS AND MANUFACTURERS SHOWN ARE TO INDICATE DEVICE, QUALITY, AND TYPE OF ITEM DESIRED ONLY. ANY SUBSTITUTION ON THE LIGHTING FIXTURES MUST BE PREAPPROVED TWO WEEKS PRIOR TO BID.
5. THE LOADS SHOWN FOR APPLIANCES AND EQUIPMENT ARE BASED ON DESIGN INFORMATION. THE CONTRACTOR SHALL VERIFY ALL APPLIANCE LOADS PRIOR TO RUNNING THE CIRCUIT. THE MINIMUM CIRCUIT REQUIREMENTS SHALL BE BASED ON THE APPLIANCE NAMEPLATE VALUE OR CODE REQUIREMENTS, WHICHEVER IS MORE STRINGENT. ADDITIONAL COMPENSATION SHALL NOT BE ALLOWED FOR APPLIANCE MODIFICATIONS BY THE CONTRACTOR.
6. COORDINATE LOCATIONS OF ELECTRICAL EQUIPMENT, DEVICES, OUTLETS, FIXTURES, ETC., WITH ARCHITECTURAL PLANS, ELEVATIONS AND REFLECTED CEILING PLANS PRIOR TO ROUGH-IN WORK.
7. ALL CONDUITS NOT LOCATED UNDER SLAB SHALL HAVE A MINIMUM BURIAL DEPTH OF 36" UNLESS NOTED OTHERWISE.
8. CONTRACTOR SHALL COORDINATE ALL WORK WITH OTHER TRADES PRIOR TO INSTALLATION. REFER TO LANDSCAPE DRAWINGS FOR EXACT LOCATION AND SIZE OF EQUIPMENT WHICH ARE PROVIDED BY OTHERS AND CONNECTED BY ELECTRICAL.
9. RECEPTACLES, SWITCHES COLOR SHALL BE SELECTED BY THE OWNER / ARCHITECT FROM STANDARD COLORS. ALL COVER PLATES SHALL BE SELECTED BY THE ARCHITECT.
10. CONDUITS LEAVING OR ENTERING BUILDING SHALL BE SEALED PER N.E.C. TO PREVENT ENTRANCE OF MOISTURE.
11. ALL DIMENSIONS TO DEVICES AFF SHALL BE TO CENTERLINE UNLESS NOTED OTHERWISE.
12. WORKING SPACE OF 36" FOR 120/240 SYSTEMS SHALL BE MAINTAINED IN FRONT OF ALL ELECTRICAL PANELS AND DEVICES.
13. ALL SIDEWALKS AND PARKING LOT ASPHALT AREAS THAT ARE CUT DUE TO NEW ELECTRICAL SERVICES SHALL BE REPAIRED TO MATCH EXISTING.
14. FINAL CONNECTION TO ALL EQUIPMENT IS SHOWN DIAGRAMMATIC. PROVIDE FINAL CONNECTION AS REQUIRED PER MANUFACTURER OF EQUIPMENT.
15. THE ELECTRICAL CONTRACTOR IS RESPONSIBLE FOR ALL CHARGES, PERMITS, FEES, ETC. RELATED TO THE CONSTRUCTION.

dell consulting
MEP Engineering
Christina Marie 50660
Alabama Certificate Number CA-4146-E
813 Downtowner Blvd. Ste. D
Mobile, Alabama 36609
P: 251-316-0015 F: 850-332-6629
DELL CONSULTING PROJECT: 23-126

was DESIGN landscape architects
landscape architecture
land planning
placemaking
Foley, Alabama
P. 251.948.7181
Mobile, Alabama
P. 251.344.4023
Jackson, Mississippi
P. 601.790.0781
Pensacola, Florida
P. 850.203.4252
www.was-design.com

A Landscape Development Plan for
Hillsdale Park
Pickleball Courts
PR-073-22 Mobile, Alabama

Revisions

No.	Date	Revisions / Submissions
	08.31.23	80% CLIENT REVIEW
	09.29.23	100% CONSTRUCTION DRAWINGS

© Copyright 2023 WAS Design Inc. These documents and their contents are the property of WAS Design. Any reproductions, revisions, modifications or use of these documents without the express written consent of WAS Desgin is prohibited by law.

Drawn: CM
Project Manager:
Principal:
Project No.:
Date: 09/29/2023

Registration
ALABAMA LICENSED No. 50660 PROFESSIONAL ENGINEER CHRISTINA MARIE DELL
09/29/2023
Drawings not valid without seal

Sheet Title

ELECTRICAL LEGEND AND SPECIFICATIONS

Sheet No.

E100

dell consulting
MEP Engineering
Christina Marie 50660
Alabama Certificate Number CA-4146-E
813 Downtowner Blvd. Ste. D
Mobile, Alabama 36609
P: 251-316-0015 F: 850-332-6629
DELL CONSULTING PROJECT: 23-126

was DESIGN landscape architects
landscape architecture
land planning
placemaking
Foley, Alabama
P. 251.948.7181
Mobile, Alabama
P. 251.344.4023
Jackson, Mississippi
P. 601.790.0781
Pensacola, Florida
P. 850.203.4252
www.was-design.com

SHEET NOTES

1. SEE ENLARGED PLAN FOR MORE INFORMATION.

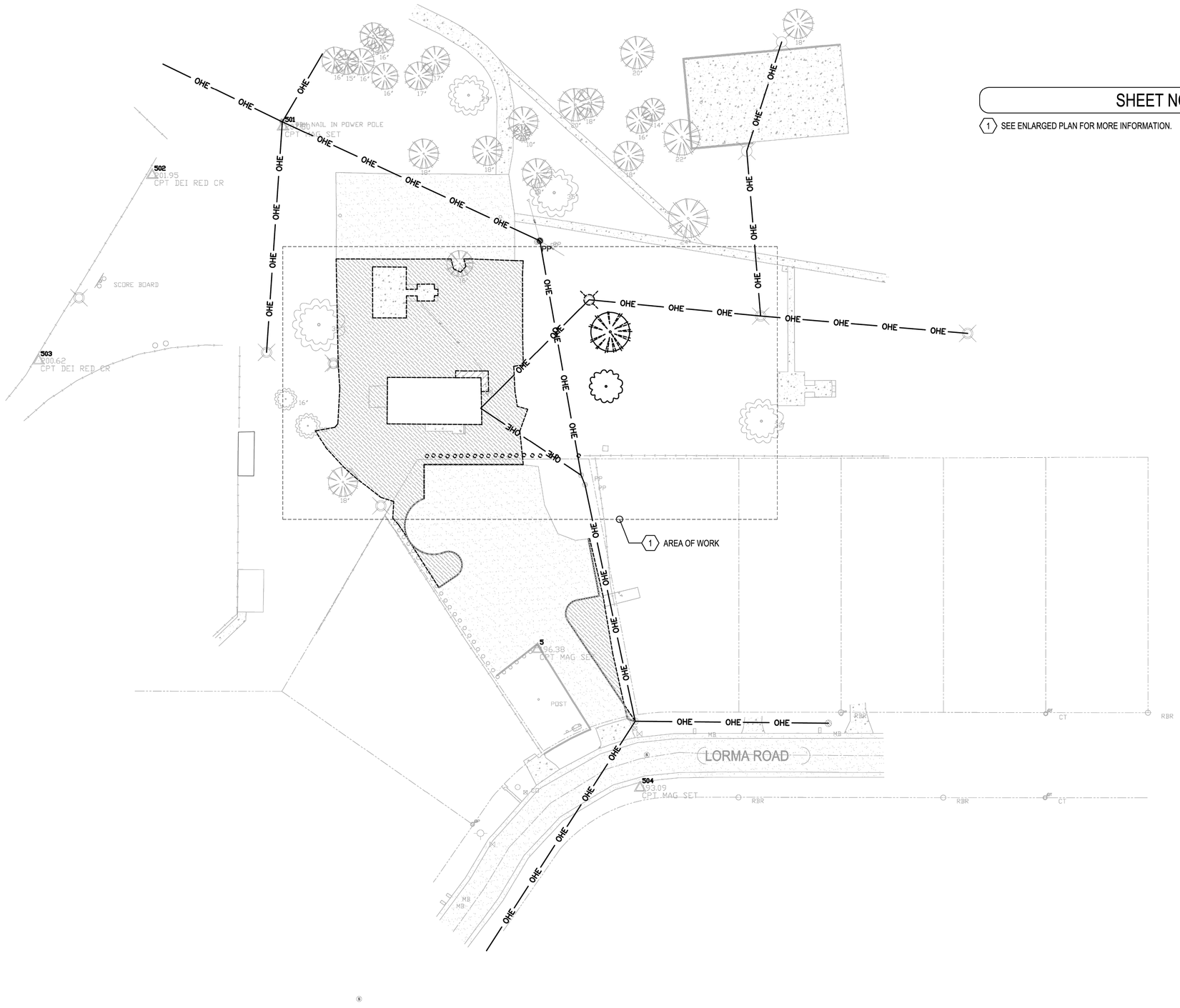

N

1 EXISTING OVERALL PLAN - ELECTRICAL

30' 0' 30' 60'
SCALE: 1"=30'-0"

A Landscape Development Plan for
Hillsdale Park Pickleball Courts
PR-073-22 Mobile, Alabama

Revisions

No.	Date	Revisions / Submissions
	08.31.23	80% CLIENT REVIEW
	09.29.23	100% CONSTRUCTION DRAWINGS

© Copyright 2023 WAS Design Inc. These documents and their contents are the property of WAS Design. Any reproductions, revisions, modifications or use of these documents without the express written consent of WAS Design is prohibited by law.

Drawn: CM
Project Manager:
Principal:
Project No.:
Date: 09/29/2023

Registration
ALABAMA LICENSED No. 50660 PROFESSIONAL ENGINEER CHRISTINA MARIE
09/29/2023
Drawings not valid without seal

Sheet Title:

EXISTING OVERALL PLAN - ELECTRICAL

Sheet No.

E200

dell consulting
MEP Engineering
Christina Marie 50660
Alabama Certificate Number CA-4146-E
813 Downtowner Blvd. Ste. D
Mobile, Alabama 36609
P: 251-316-0015 F: 850-332-6629
DELL CONSULTING PROJECT: 23-126

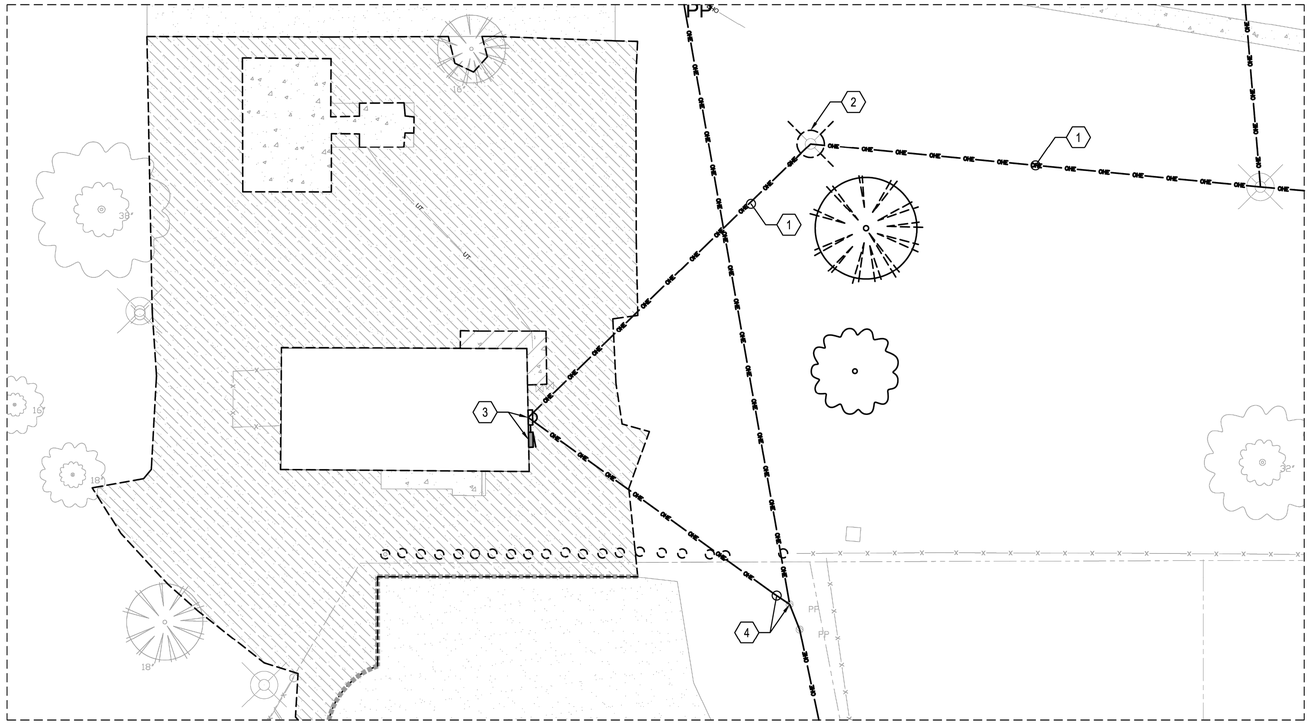

GENERAL NOTE(S)

1. IT IS THE RESPONSIBILITY OF THE CONTRACTOR TO LOCATE ALL UNDERGROUND UTILITIES. NEW CONDUITS INSTALLED ARE TO BE INSTALLED TO AVOID CONFLICT WITH EXISTING TREE ROOT SYSTEMS AS WELL AS EXISTING UTILITIES.

SHEET NOTES

1. THE CONTRACTOR SHALL REMOVE THE EXISTING OVERHEAD LIGHTING FEEDER. SEE NEW WORK PLANS FOR MORE INFORMATION.
2. APPROXIMATE LOCATION OF EXISTING LIGHT POLE TO BE COMPLETELY REMOVED. THE ELECTRICAL CONTRACTOR IS TO REMOVE THE POLE TO AT LEAST 2' BELOW FINAL FINISHED GRADE. ALL CONDUIT, WIRE, ETC. ASSOCIATED WITH THE POLE IS TO BE COMPLETELY REMOVED. FOR ANY PHONE, CABLE, ETC. UTILITY USING THIS POLE AS SUPPORT FOR THEIR LINE IS TO BE COORDINATED WITH THAT COMPANY TO BE RELOCATED.
3. APPROXIMATE LOCATION OF EXISTING 240 VOLT 150A 3Ø SERVICE TO BE REPLACED AND RELOCATED PER NEW WORK PLANS. THE EXISTING CIRCUITS ARE TO BE REWORKED AS REQUIRED TO BE RECONNECTED TO THE NEW PANEL. ONE CIRCUIT IS CURRENTLY BEING ROUTED THROUGH THE METER - THIS CIRCUIT SHALL BE REROUTED SO THAT IT DOES NOT PASS THROUGH THE METER.
4. APPROXIMATE LOCATION OF EXISTING ALABAMA POWER COMPANY TRANSFORMER POLE TO REMAIN. EXISTING OVERHEAD FEEDER SERVICE TO BE DISCONNECTED FOR SERVICE REPLACEMENT AND RECONNECTED BY THE UTILITY. ALL ASPECTS OF THE NEW SERVICE REPLACEMENT SHALL BE COORDINATE WITH ALABAMA POWER COMPANY PRIOR TO BEGINNING ANY WORK.

N

1 EXISTING PLAN - ENLARGED ELECTRICAL

16' 0' 16' 32'
SCALE: 1/16"=1'-0"

WAS DESIGN landscape architects
landscape architecture
land planning
placemaking
Foley, Alabama
P. 251.948.7181
Mobile, Alabama
P. 251.344.4023
Jackson, Mississippi
P. 601.790.0781
Pensacola, Florida
P. 850.203.4252
www.was-design.com

A Landscape Development Plan for
Hillsdale Park Pickleball Courts
PR-073-22 Mobile, Alabama

Revisions

No.	Date	Revisions / Submissions
	08.31.23	80% CLIENT REVIEW
	09.29.23	100% CONSTRUCTION DRAWINGS

© Copyright 2023 WAS Design Inc. These documents and their contents are the property of WAS Design. Any reproductions, revisions, modifications or use of these documents without the express written consent of WAS Design is prohibited by law.

Drawn: CM
Project Manager:
Principal:
Project No.:
Date: 09/29/2023

Registration
ALABAMA LICENSED No. 50660 PROFESSIONAL ENGINEER CHRISTINA MARIE
09/29/2023
Drawings not valid without seal

Sheet Title
ENLARGED EXISTING PLAN - ELECTRICAL

Sheet No.
E201

dell consulting
MEP Engineering
Christina Marie 50660
Alabama Certificate Number CA-4146-E
813 Downtowner Blvd. Ste. D
Mobile, Alabama 36609
P: 251-316-0015 F: 850-332-6629
DELL CONSULTING PROJECT: 23-126

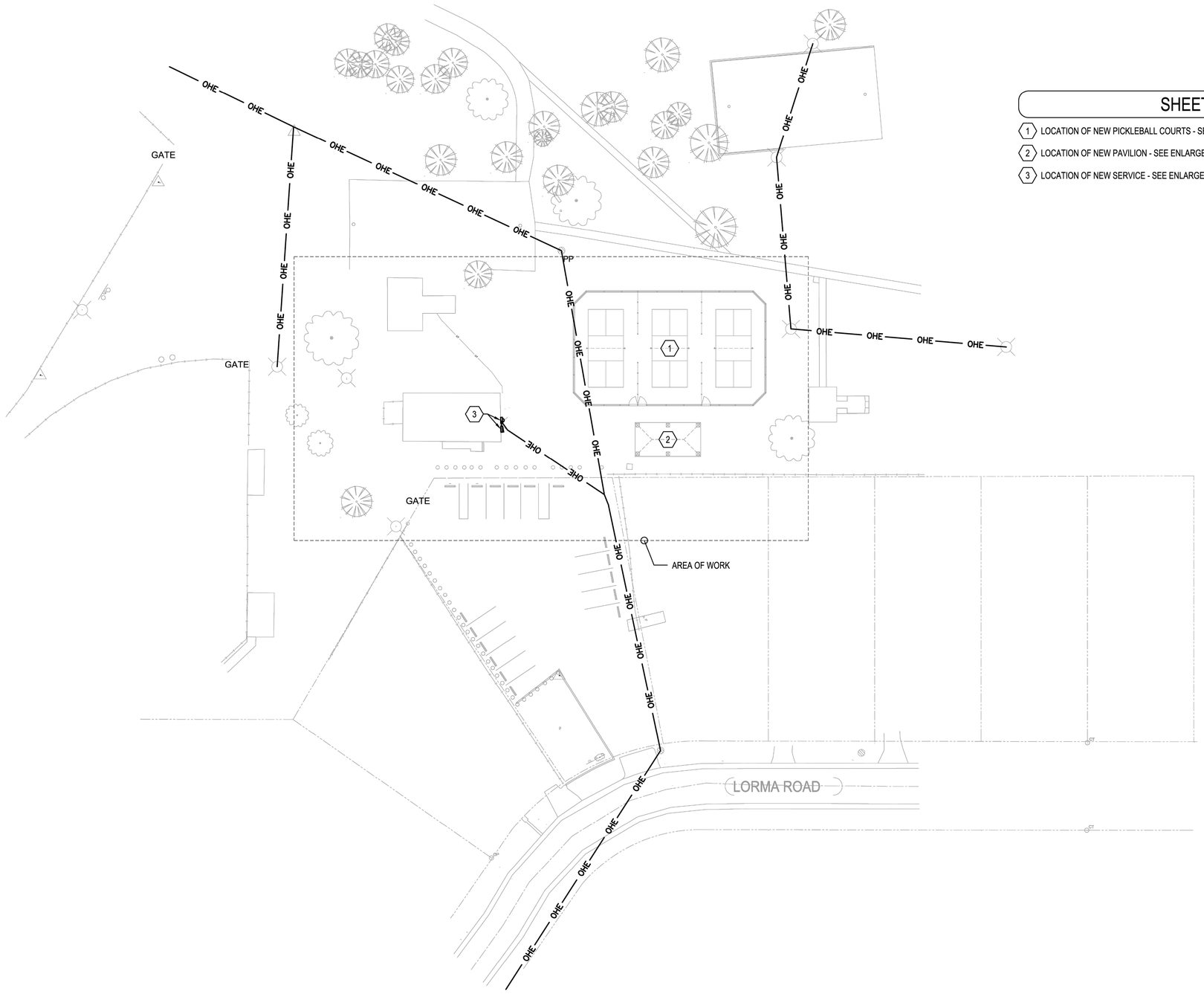

SHEET NOTES

1. LOCATION OF NEW PICKLEBALL COURTS - SEE ENLARGED PLAN FOR MORE INFORMATION.
2. LOCATION OF NEW PAVILION - SEE ENLARGED PLAN FOR MORE INFORMATION.
3. LOCATION OF NEW SERVICE - SEE ENLARGED PLAN FOR MORE INFORMATION.

N

1 NEW WORK OVERALL PLAN - ELECTRICAL

30' 0' 30' 60'
SCALE: 1"=30'-0"

was DESIGN landscape architects
landscape architecture
land planning
placemaking
Foley, Alabama
P. 251.948.7181
Mobile, Alabama
P. 251.344.4023
Jackson, Mississippi
P. 601.790.0781
Pensacola, Florida
P. 850.203.4252
www.was-design.com

A Landscape Development Plan for
Hillsdale Park Pickleball Courts
PR-073-22 Mobile, Alabama

Revisions

No.	Date	Revisions / Submissions
	08.31.23	80% CLIENT REVIEW
	09.29.23	100% CONSTRUCTION DRAWINGS

© Copyright 2023 WAS Design Inc. These documents and their contents are the property of WAS Design. Any reproductions, revisions, modifications or use of these documents without the express written consent of WAS Design is prohibited by law.

Drawn: CM
Project Manager:
Principal:
Project No.:
Date: 09/29/2023

Registration
ALABAMA LICENSED No. 50660 PROFESSIONAL ENGINEER CHRISTINA MARIE
09/29/2023
Drawings not valid without seal

Sheet Title:

NEW WORK OVERALL PLAN - ELECTRICAL

Sheet No.
E300

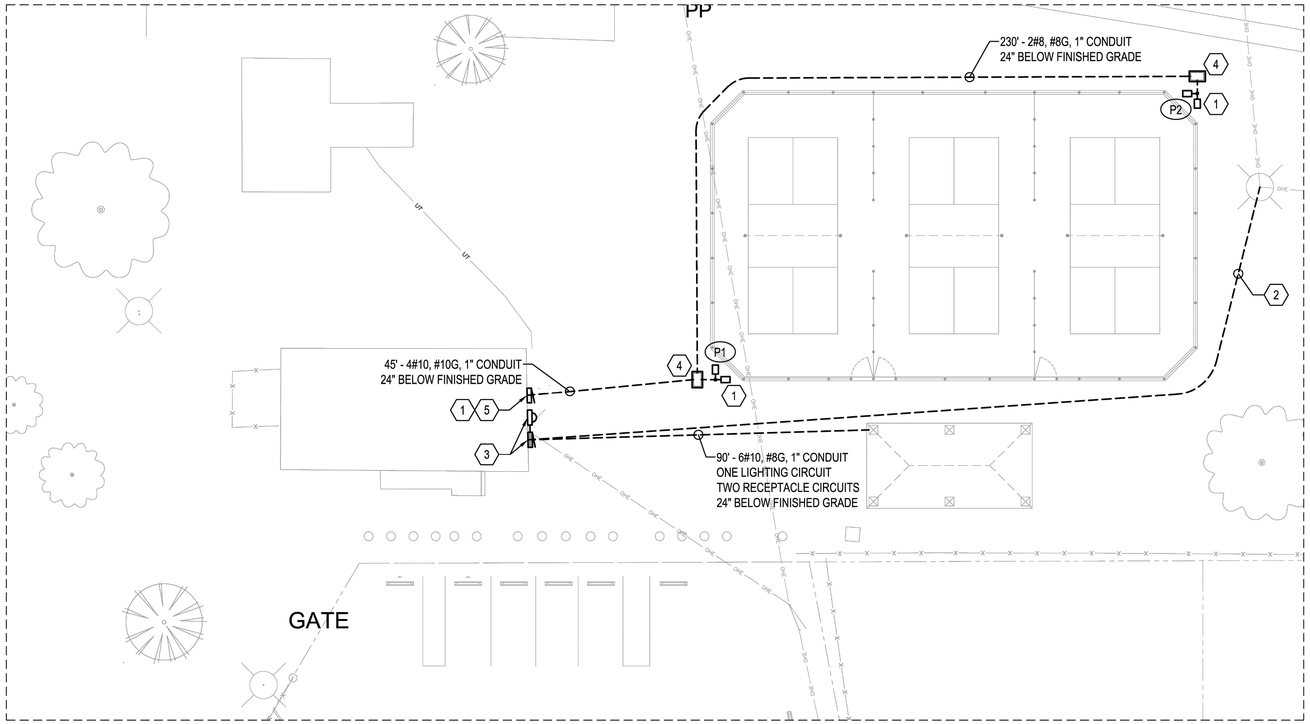

dell consulting
MEP Engineering
Christina Marie 50660
Alabama Certificate Number C.A-4146-E
813 Downtowner Blvd. Ste. D
Mobile, Alabama 36609
P: 251-316-0013 F: 850-332-6629
DELL CONSULTING PROJECT: 23-126

GENERAL NOTE(S)

1. A NEW FULLY OPERATIONAL MUSCO SYSTEM (INCLUDING CONTROLLER, PROGRAMMING, FIXTURES, POLES, ALL ASSOCIATED CONDUCTORS AND HARDWARE, ETC.) IS TO BE FURNISHED AND INSTALLED BY THE ELECTRICAL CONTRACTOR PER MUSCO'S SPECIFICATIONS AND DIRECTION AS AN ADDITIVE ALTERNATE. THE HANDHOLES AND RACEWAYS ARE TO BE INCLUDED IN THE BASE BID.
2. ALL NEW EXPOSED CONDUIT SHALL BE GRS.

SHEET NOTES

1. THE MUSCO SYSTEM (INCLUDING CONTROLLER, FIXTURES, POLES, AND ALL ASSOCIATED HARDWARE) IS TO BE FURNISHED AND INSTALLED BY THE ELECTRICAL CONTRACTOR AS AN ADDITIVE ALTERNATE. THE SYSTEM IS TO BE INSTALLED PER MUSCO'S SPECIFICATIONS AND DIRECTION.
2. THE CONTRACTOR SHALL REMOVE THE EXISTING OVERHEAD FEEDER AND PROVIDE AND INSTALL NEW 2#8, #10G IN 1" CONDUIT A MINIMUM OF 24" BELOW FINISHED GRADE TO SERVE THE EXISTING FIXTURES. THE ENTIRE CIRCUIT SHALL BE REPLACED NEW FROM THE NEW LIGHTS BACK TO THE BREAKER SERVING THE LIGHTS.
3. NEW LOCATION OF NEW 240 VOLT 200A 3Ø SERVICE. THE NEW SERVICE SHALL BE LOWERED AND SHALL BE INSTALLED IN ACCORDANCE WITH THE NEC AND ALABAMA POWER COMPANY REQUIREMENTS. THE PANEL SHALL BE INSTALLED IN ACCORDANCE WITH NEC 240.24 SO THAT THE CIRCUIT BREAKER IN THE HIGHEST POSITION DOES NOT EXCEED 6'-7" FROM FINISHED GRADE. THE METER SHALL BE INSTALLED IN ACCORDANCE WITH ALABAMA POWER COMPANY REQUIREMENTS SO THAT THE CENTER OF METER SHALL NOT BE MORE THAN FIVE FEET OR LESS THAN FOUR FEET ABOVE FINAL GRADE OR FLOOR LEVEL.
4. THE ELECTRICAL CONTRACTOR SHALL PROVIDE AND INSTALL A NEW HANDHOLE AT THIS APPROXIMATE LOCATION. SEE DETAIL FOR MORE INFORMATION.
5. NEW MUSCO LIGHTING CONTROLLER.

N

1 NEW WORK PLAN - ENLARGED ELECTRICAL

16' 0' 16' 32'
SCALE: 1/16"=1'-0"

was DESIGN landscape architects
landscape architecture
land planning
placemaking
Foley, Alabama
P. 251.948.7181
Mobile, Alabama
P. 251.344.4023
Jackson, Mississippi
P. 601.790.0781
Pensacola, Florida
P. 850.203.4252
www.was-design.com

A Landscape Development Plan for
Hillsdale Park Pickleball Courts
PR-073-22 Mobile, Alabama

Revisions

No.	Date	Revisions / Submissions
	08.31.23	80% CLIENT REVIEW
	09.29.23	100% CONSTRUCTION DRAWINGS

© Copyright 2023 WAS Design Inc. These documents and their contents are the property of WAS Design. Any reproductions, revisions, modifications or use of these documents without the express written consent of WAS Design is prohibited by law.

Drawn: CM
Project Manager:
Principal:
Project No.:
Date: 09/29/2023

Registration
ALABAMA LICENSED No. 50660 PROFESSIONAL ENGINEER CHRISTINA MARIE
09/29/2023
Drawings not valid without seal

Sheet Title

ENLARGED NEW WORK PLAN - ELECTRICAL

Sheet No.
E301

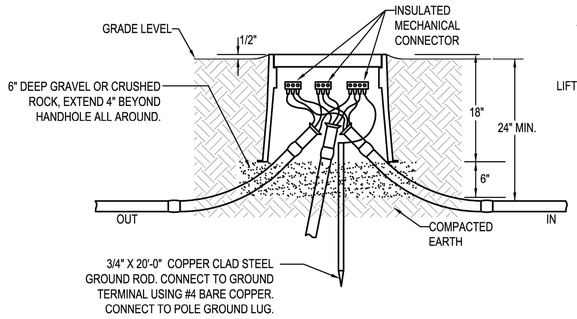

INSTALLATION DETAIL

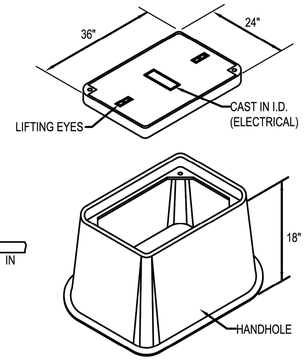

CONSTRUCTION DETAIL

HANDHOLE AS QUAZITE PG2436HH0017 BOX COMPLETE WITH PG2436HA0017 COVER. COVER SHALL BE TRAFFIC RATED FOR 22,500 LBS.

HANDHOLE NOTES:

1. HANDHOLE SHALL HAVE LOGO CAST IN COVER (LOGO=ELECTRICAL). INSTALL IN ACCORDANCE WITH THE MANUFACTURER'S PRINTED INSTRUCTIONS AND THESE REQUIREMENTS.
2. TERMINATE CONDUITS ENTERING HANDHOLE WITH END BELL. CONSTRUCT CONDUIT RISE TO ENTER BOX FROM SIDE WITH 22-1/2° SWEEP ELBOWS.
3. CONDUITS ENTERING AND LEAVING HANDHOLE SHALL BE SEALED IN ACCORDANCE WITH THE NATIONAL ELECTRICAL CODE ARTICLES 514 AND 501.15.

1 ELECTRICAL HANDHOLE DETAIL

NOT TO SCALE

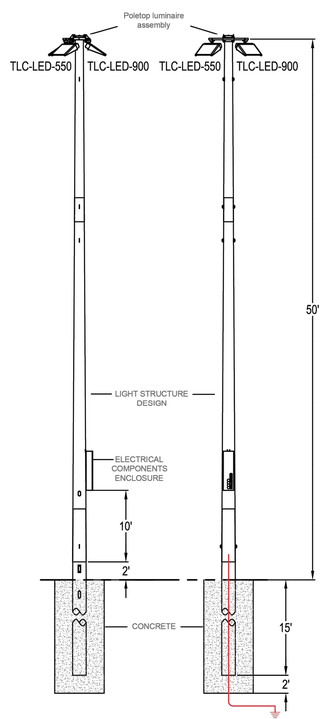

CONNECT TO 3/4" X 20'-0" COPPER CLAD STEEL GROUND ROD AT HANDHOLE USING #4 BARE COPPER.

EMBEDMENT CHART

THE FOLLOWING ARE INITIAL EMBEDMENT DEPTHS THAT HAVE BEEN CONFIRMED BY A MUSCO STRUCTURAL ENGINEER:

POLE	EMBEDMENT	DRILLED HOLE DIAMETER	MOUNTING HEIGHT
P#	15'-0"	36"	50'

DRILL PAST THE EMBEDMENT DEPTH 2'-0" AND ADD 2' OF FILL MATERIAL AND COMPACT. SUSPEND AS THE BACKFILL WITH CONCRETE IS COMPLETE.

2 POLE DETAIL (ALTERNATE BID)

NOT TO SCALE

PANELBOARD SCHEDULE

MARK: EXISTING PANEL 2MDP

CKT #	LOAD DESCRIPTION	BREAKER P	BREAKER TRIP	PHASE (kVA) A	PHASE (kVA) B	PHASE (kVA) C	PHASE (kVA) A	PHASE (kVA) B	PHASE (kVA) C	BREAKER TRIP	BREAKER P	LOAD DESCRIPTION	CKT #
1	OCCUPIED BREAKER	1	20	1.0						-	-	SPACE	2
3	SPACE	-	-		X			X		-	-	SPACE	4
5	SPACE	-	-							-	-	SPACE	6
7	OCCUPIED BREAKER	1	20	1.0						-	-	SPACE	8
9	SPACE	-	-		X			X		-	-	SPACE	10
11	OCCUPIED BREAKER	2	60			1.0				-	-	SPACE	12
13				1.0						-	-	SPACE	14
15	SPACE	-	-		X			X		-	-	SPACE	16
17						1.0				-	-	SPACE	18
19	OCCUPIED BREAKER	3	50	1.0						-	-	SPACE	20
21					1.0			X		-	-	SPACE	22
23	SPACE	-	-						5.0	100	2	OCCUPIED BREAKER	24
25	OCCUPIED BREAKER	1	20	1.0			5.0						26
27	SPACE	-	-		X			X		-	-	SPACE	28
29	OCCUPIED BREAKER	1	20			1.0				-	-	SPACE	30
				5.0	1.0	3.0	5.0		5.0				

TOTAL (kVA) ØA 10.0 ØB 1.0 ØC 8.0 HIGH PHASE (AMPS) 83.3

TOTAL CONNECTED LOAD (kVA) 19.0 TOTAL LOAD (AMPS) 45.7

CREATE A DIRECTORY TO INDICATE INSTALLED LOADS. INDICATE LOAD TYPE (REC, LTG, AHU-1, ETC.) AND ROOM NUMBERS SERVED FOR EVERY BRANCH CIRCUIT.

PER ALABAMA POWER COMPANY RECORDS, EXISTING PEAK LOAD IS 19KW.

PANELBOARD SCHEDULE

MARK: NEW PANEL 2MDP

CKT #	LOAD DESCRIPTION	BREAKER P	BREAKER TRIP	PHASE (kVA) A	PHASE (kVA) B	PHASE (kVA) C	PHASE (kVA) A	PHASE (kVA) B	PHASE (kVA) C	BREAKER TRIP	BREAKER P	LOAD DESCRIPTION	CKT #
1	OCCUPIED BREAKER	1	20	1.0						20	1	SPARE	2
3	HIGH LEG *	-	-		X			X		-	-	HIGH LEG *	4
5	PAVILION RECEPTACLES	1	20			0.2			1.2				6
7	OCCUPIED BREAKER	1	20	1.0			1.2			20	3	PICKLEBALL COURT LIGHTING	8
9	OCCUPIED BREAKER	2	60		1.0			1.2					10
11						1.0				20	1	SPARE	12
13	OCCUPIED BREAKER	1	20	1.0			1.5			20	1	CONTROL TRANSFORMER	14
15	HIGH LEG *	-	-		X			X		-	-	HIGH LEG *	16
17						1.0				20	1	SPARE	18
19	OCCUPIED BREAKER	3	50	1.0			0.3			20	1	PAVILION LIGHTING	20
21					1.0			5.0		100	2	OCCUPIED BREAKER	22
23	PAVILION RECEPTACLES	1	20			0.2			5.0				24
25	OCCUPIED BREAKER	1	20	1.0						20	1	SPARE	26
27	HIGH LEG *	-	-		X			X		-	-	HIGH LEG *	28
29	SPARE	1	20							20	1	SPARE	30
				5.0	2.0	2.4	3.0	6.2	6.2				

TOTAL (kVA) ØA 8.0 ØB 8.2 ØC 8.6 HIGH PHASE (AMPS) 71.5

TOTAL CONNECTED LOAD (kVA) 24.7 TOTAL LOAD (AMPS) 59.5

CREATE A DIRECTORY TO INDICATE INSTALLED LOADS. INDICATE LOAD TYPE (REC, LTG, AHU-1, ETC.) AND ROOM NUMBERS SERVED FOR EVERY BRANCH CIRCUIT.

THE ELECTRICAL CONTRACTRO SHALL MARK THE HIGH LEG IN ACCORDANCE WITH NEC 408.3(F)(1).

* NOT TO BE USED FOR SINGLE POLE LOADS.

LIGHTING FIXTURE SCHEDULE

MARK	MANUFACTURER AND CATALOG NUMBER	LAMPS TYPE	LAMPS WATTS	TOTAL WATTS	VOLTAGE	MOUNTING	NOTES
P1/P2	MUSCO - TLC-900 MUSCO - TLC-900 MUSCO POLE	LED	880 890	1770	240	POLE 50' A.F.G.	POLE MOUNTED LED SPORTS LIGHTING
SL	LITHONIA - DSXSCLED-20C-350-40K T5W-MVOLT-SRM-PIR-DDBXD	LED	25	25	MVOLT	SURFACE	LED SURFACE MOUNTED SECURITY LIGHTING FIXTURE WITH INTEGRAL MOTION AMBIENT SENSOR
NOTES	FIXTURES WITH HALF FILLED IN CENTER SHALL BE PROVIDED WITH AN EMERGENCY BALLAST THAT IS THE MAXIMUM AVAILABLE FOR THE FIXTURE.						
	THE ELECTRICAL CONTRACTOR SHALL PROVIDE AND INSTALL ALL MOUNTING HARDWARE AS REQUIRED FOR A COMPLETE INSTALLATION						

dell consulting
MEP Engineering
Christina Marie 50660
Alabama Certificate Number CA-4146-E
813 Downtowner Blvd. Ste. D
Mobile, Alabama 36609
P: 251-316-0015 F: 850-332-6629
DELL CONSULTING PROJECT: 23-126

was DESIGN landscape architects
landscape architecture
land planning
placemaking
Foley, Alabama P. 251.948.7181
Mobile, Alabama P. 251.344.4023
Jackson, Mississippi P. 601.790.0781
Pensacola, Florida P. 850.203.4252
www.was-design.com

A Landscape Development Plan for
Hillsdale Park Pickleball Courts
PR-073-22 Mobile, Alabama

Revisions

No.	Date	Revisions / Submissions
	08.31.23	80% CLIENT REVIEW
	09.29.23	100% CONSTRUCTION DRAWINGS

© Copyright 2023 WAS Design Inc. These documents and their contents are the property of WAS Design. Any reproductions, revisions, modifications or use of these documents without the express written consent of WAS Design is prohibited by law.

Drawn: CM
Project Manager:
Principal:
Project No.:
Date: 09/29/2023
Registration: ALABAMA CHRISTINA MARIE DELL No. 50660 PROFESSIONAL ENGINEER
09/29/2023
Drawings not valid without seal

Sheet Title:

ELECTRICAL DETAILS

Sheet No.

E400

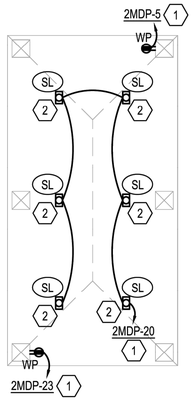

SHEET NOTES

1. CIRCUITS SERVING THE PAVILION LIGHTING AND RECEPTACLES SHALL BE CONCEALED IN THE STRUCTURE. THE ELECTRICAL CONTRACTOR SHALL COORDINATE WITH THE PAVILION INSTALLER TO CONCEAL THE CIRCUITS UNDERGROUND AND UP THROUGH THE COLUMNS TO THE LIGHTS AND RECEPTACLES.
2. THE CONTRACTOR SHALL MOUNT THE FIXTURE IN THE STRUCTURE AT A HEIGHT TO PROVIDE APPROPRIATE LIGHTING DISTRIBUTION AND TO MINIMIZE VANDALISM. CONTRACTOR SHALL PROVIDE AND INSTALL ADDITIONAL MOUNTING HARDWARE TO SECURE THE FIXTURE AGAINST POTENTIAL VANDALISM.

N

1 NEW WORK PLAN - ELECTRICAL

16' 0' 16' 32'

SCALE: 1/16"=1'-0"

PANELBOARD INFORMATION SCHEDULE

MARK	ENCLOSURE TYPE	MOUNTING STYLE	VOLTAGE	Ø	WIRE	MAIN BKR	IF MLO, SERVING BKR	SERVICE RATED	kAIC RATING	Ø BUS RATING (A)	N BUS RATING	FEEDER CONDUCTORS	FEEDER GROUND	FEEDER CONDUIT
2MDP	NEMA 3R	SURFACE	120/240	3	4	200	N/A	YES	10	200	100%	4#3/0	NONE	2 1/2"C
NOTES	ALL PANELBOARDS ARE TO HAVE ARC FLASH WARNING LABEL IN ACCORDANCE WITH THE NATIONAL ELECTRIC CODE ARTICLE 110.16													
	ALL PANELBOARDS ARE TO HAVE COPPER BUS.													

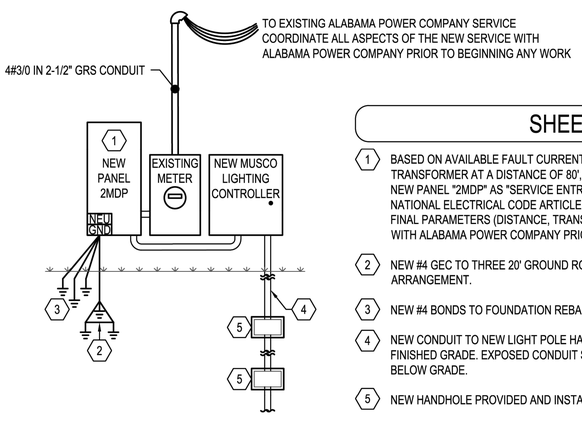

SHEET NOTES

1. BASED ON AVAILABLE FAULT CURRENT FROM A 120/240 VOLT 3Ø 30 KVA OVERHEAD TRANSFORMER AT A DISTANCE OF 80', THE ELECTRICAL CONTRACTOR SHALL LABEL THE NEW PANEL "2MDP" AS "SERVICE ENTRANCE RATED" AND IN ACCORDANCE WITH THE NATIONAL ELECTRICAL CODE ARTICLE 110.24; AVAILABLE FAULT CURRENT 3,256 AMPS. FINAL PARAMETERS (DISTANCE, TRANSFORMER SIZE, ETC.) SHALL BE COORDINATED WITH ALABAMA POWER COMPANY PRIOR TO LABELING, ADJUST AS REQUIRED.
2. NEW #4 GEC TO THREE 20' GROUND RODS ON 20' CENTERS IN EQUILATERAL DELTA ARRANGEMENT.
3. NEW #4 BONDS TO FOUNDATION REBAR, BUILDING WATER SERVICE AND BUILDING STEEL.
4. NEW CONDUIT TO NEW LIGHT POLE HANDHOLE INSTALLED A MINIM,MUM OF 24" BELOW FINISHED GRADE. EXPOSED CONDUIT SHALL BE GRS AND SHALL TRANSITION TO PVC BELOW GRADE.
5. NEW HANDHOLE PROVIDED AND INSTALLED BY ELECTRICAL CONTRACTOR.

3 NEW 240 VOLT 3Ø SERVICE PEDESTAL SINGLE LINE RISER DIAGRAM

NOT TO SCALE

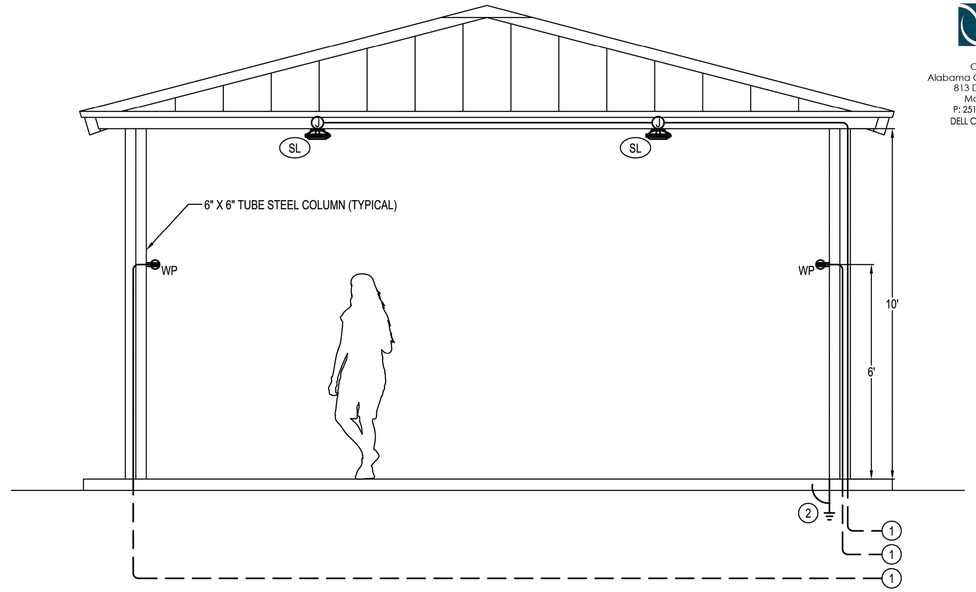

PAVILION NOTES

1. CIRCUITS SERVING THE PAVILION LIGHTING AND RECEPTACLES SHALL BE CONCEALED IN THE STRUCTURE. THE ELECTRICAL CONTRACTOR SHALL COORDINATE WITH THE PAVILION INSTALLER TO CONCEAL THE CIRCUITS UNDERGROUND AND UP THROUGH THE COLUMNS TO THE LIGHTS AND RECEPTACLES. MOUNT BOX TO PAVILION COLUMN.
2. 20' GROUND ROD WITH #4 GEC BOND TO ASSOCIATED METAL STRUCTURE. ENSURE ALL METAL PORTIONS OF THE PAVILION ARE BONDED.

2 PAVILION ELEVATION

NOT TO SCALE

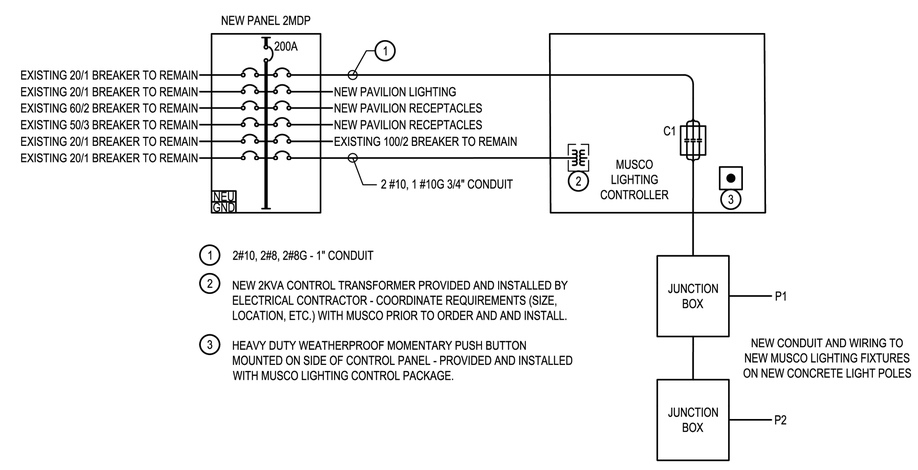

1. 2#10, 2#8, 2#8G - 1" CONDUIT
2. NEW 2KVA CONTROL TRANSFORMER PROVIDED AND INSTALLED BY ELECTRICAL CONTRACTOR - COORDINATE REQUIREMENTS (SIZE, LOCATION, ETC.) WITH MUSCO PRIOR TO ORDER AND AND INSTALL.
3. HEAVY DUTY WEATHERPROOF MOMENTARY PUSH BUTTON MOUNTED ON SIDE OF CONTROL PANEL - PROVIDED AND INSTALLED WITH MUSCO LIGHTING CONTROL PACKAGE.

4 PICKLEBALL COURTS LIGHTING POWER & CONTROL DIAGRAM

NOT TO SCALE

dell consulting
MEP Engineering
Christina Marie 50660
Alabama Certificate Number CA-4146-E
813 Downtowner Blvd. Ste. D
Mobile, Alabama 36609
P: 251-316-0015 F: 850-332-6629
DELL CONSULTING PROJECT: 23-126

was DESIGN landscape architects
landscape architecture
land planning
placemaking
Foley, Alabama
P. 251.948.7181
Mobile, Alabama
P. 251.344.4023
Jackson, Mississippi
P. 601.790.0781
Pensacola, Florida
P. 850.203.4252
www.was-design.com

A Landscape Development Plan for
Hillsdale Park Pickleball Courts
PR-073-22 Mobile, Alabama

Revisions

No.	Date	Revisions / Submissions
	08.31.23	80% CLIENT REVIEW
	09.29.23	100% CONSTRUCTION DRAWINGS

© Copyright 2023 WAS Design Inc. These documents and their contents are the property of WAS Design. Any reproductions, revisions, modifications or use of these documents without the express written consent of WAS Desgin is prohibited by law.

CM
Drawn
Project Manager
Principal
Project No.
09/29/2023
Date
Registration
ALABAMA LICENSED No. 50660 PROFESSIONAL ENGINEER CHRISTINA MARIE DELL
09/29/2023
Drawings not valid without seal
Sheet Title

ELECTRICAL DETAILS

Sheet No.
E401